PARTS LIST NO. 530-067624 – 1/1/90		Poulan PRO™ PARTS LIST	CHAIN SAW MODEL: S25AV
Page No. 1	REPLACES NONE	Note: Illustrations may differ from actual models due to design changes.	

⚠ WARNING

All repairs, adjustments and maintenance not described in the Operator's Manual must be performed by qualified service personnel.

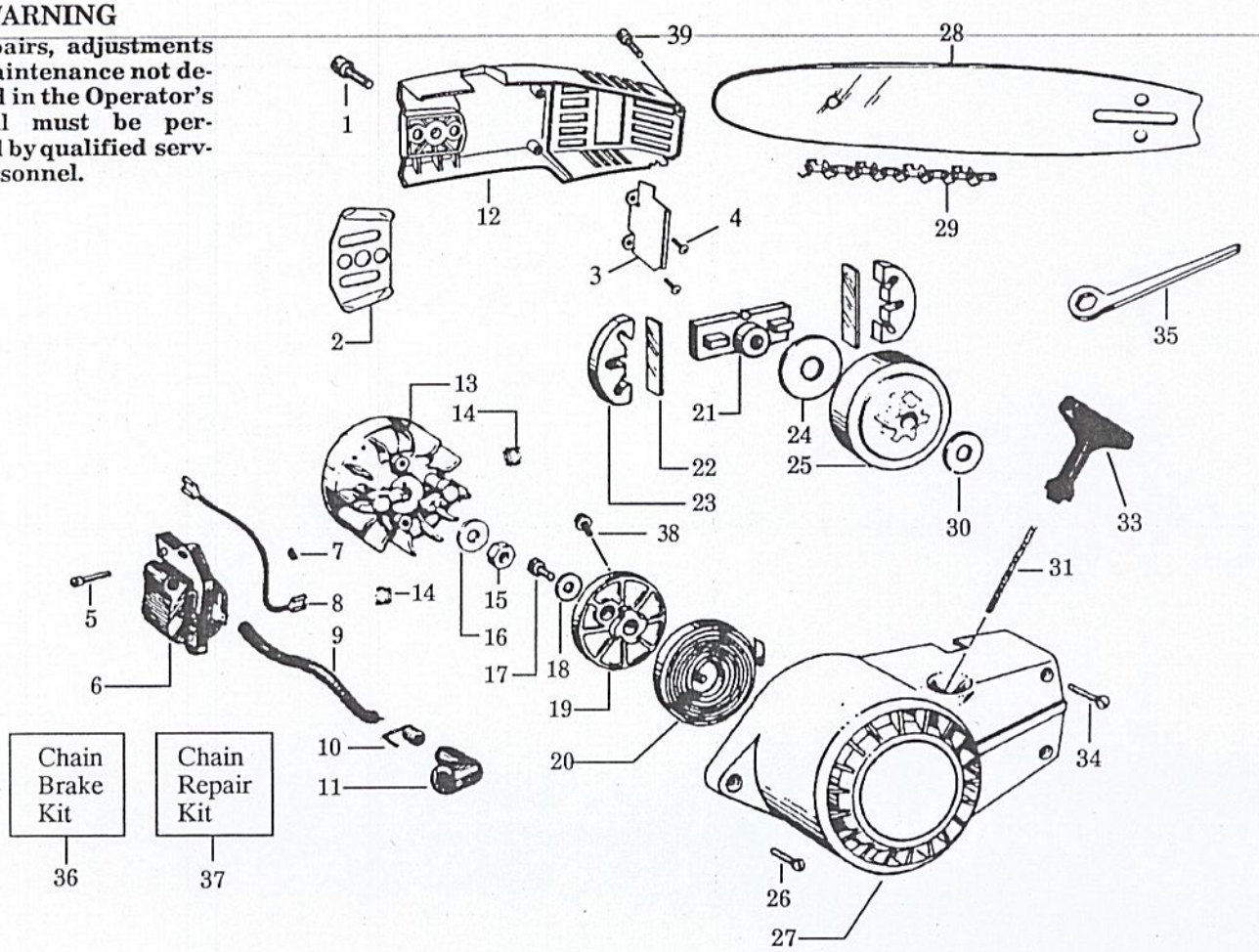

KEY NO.	PART NO.	DESCRIPTION
1	530-015819	Screw
2	530-023864	Guide Plate
3	530-029260	Baffle
4	530-015407	Screw
5	530-015128	Screw
6	530-039088	Ignition Module (Includes 8,9,10 & 11)
7	530-015126	Flywheel Key (Also shown as #27, page 2)
8	530-039117	Lead–Stop Switch
9	530-039026	High Tension Lead (Bulk No. 8141)
10	530-039071	Plug Connector Spring
11	530-039097	Spark Plug Boot
12	530-029259	Bar Clamp
13	530-039111	Flywheel Ass'y.
14	530-023817	Starter Dog Spring
15	530-626605	Nut
16	530-015127	Washer
17	530-001724	Screw
18	530-015123	Washer
19	530-069289	Starter Pulley
20	530-042023	Starter Spring
21	530-022079	Clutch Spider
22	530-023381	Clutch Springs
23	530-023379	Clutch Shoes
24	530-023382	Clutch Plate
25	530-048024	Drum and Sprocket Ass'y.–6 tooth, 3/8 pitch

KEY NO.	PART NO.	DESCRIPTION
26	530-015074	Screw
27	530-011243	Fan Housing
28	952-044369	Bar – 16" SN
29	952-051319	Chain – 16" (P101S-56)
30	530-023378	Thrust Washer – Clutch
31	530-069232	Rope Kit
33	530-026735	Starter Handle
34	530-015122	Screw
35	530-031063	Bar Wrench
36	952-069259	Chain Brake Kit
37	530-052073	Chain Repair Kit
38	530-015823	Screw
39	530-015838	Screw
Not Shown		
	530-029360	Bar Clamp Decal
	530-029361	Fan Housing Decal
	530-067623	Operator's Manual
	530-027928	Replacement Bar & Chain Decal
	530-061234	Carton
	530-014172	Carton Contents Bag

✓ = Part Change

*Indicates Engine Gasket Kit Contents

PARTS LIST NO. 530-067624 – 1/1/90		Poulan PRO™ PARTS LIST	CHAIN SAW MODEL: S25AV
Page No. 2	REPLACES NONE	Note: Illustrations may differ from actual models due to design changes.	

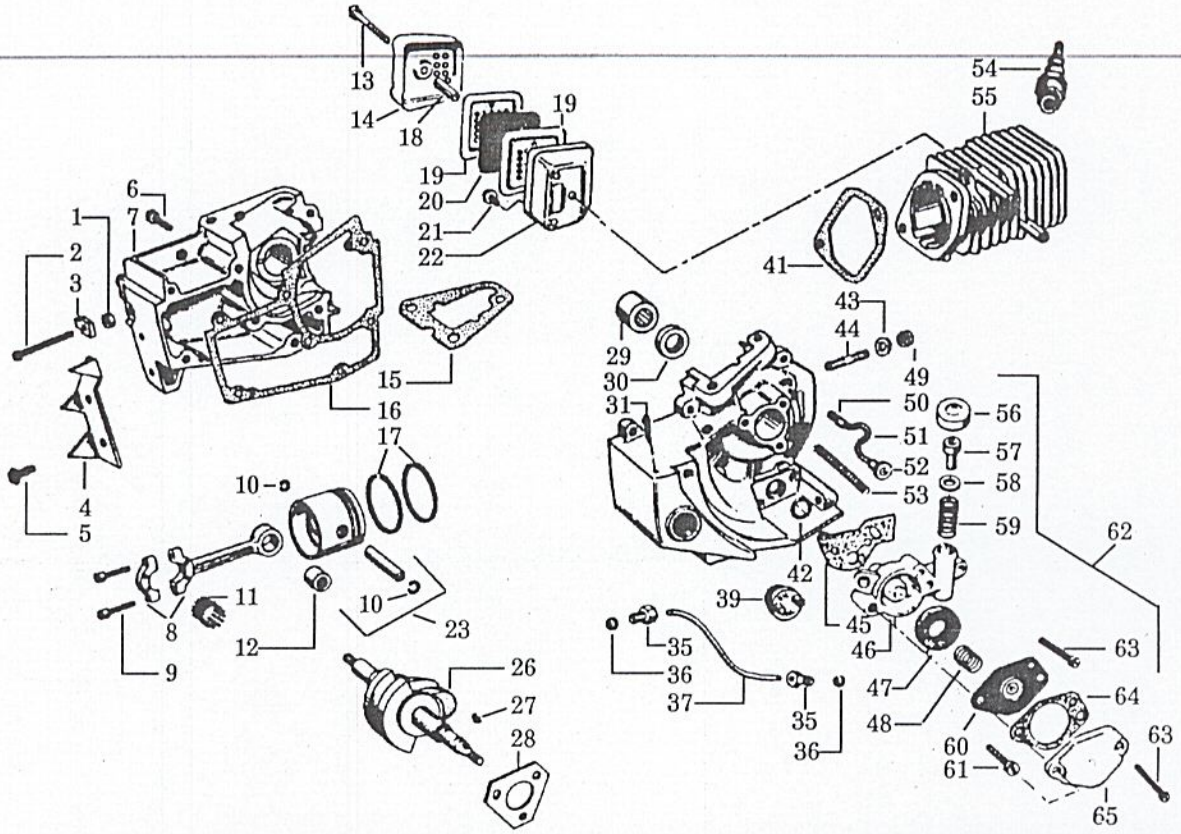

KEY NO.	PART NO.	DESCRIPTION
1	530-015135	Nut
2	530-015134	Screw
3	530-023492	Bar Adjusting Pin
4	530-023387	Spur (Optional)
5	530-015539	Screw
6	530-015136	Screw
7	530-010223	Crankcase Ass'y. (Includes 1,2,3,16,29,30,31&44)
8	530-022077	Connecting Rod Ass'y. (Includes #9&12)
9	530-001713	Screw
10	530-015131	Piston Pin Retainer
11	530-032019	Crankpin Rollers (Strip of 28)
12	530-032018	Piston Pin Bearing
13	530-015189	Screw
14	530-029271	Muffler Cover
15	* 530-019049	Gasket-Carburetor Housing to Crankcase
16	* 530-019044	Crankcase Gasket
17	530-029391	Piston Rings
18	530-015187	Muffler Spacer
19	530-029283	Muffler Baffle
20	530-023592	Muffler Screen
21	530-001709	Screw
22	530-023604	Muffler Body
23	530-069298	Piston Ass'y. (Incl. #10)
26	530-022173	Crankshaft
27	530-015126	Flywheel Key
28	530-023354	Crankcase Thrust Washer
29	530-032021	Bearing
30	* 530-019051	Seal
31	530-069185	Oil Vent Pin Replacement Kit

KEY NO.	PART NO.	DESCRIPTION
35	530-002615	Tubing Nut
36	530-002464	Ferrule 1/8" Tubing
37	530-021013	Discharge Line-Oil Pump (Bulk 8115)
39	530-023874	Oil Cap (Incl. O-Ring)
41	* 530-019043	Cylinder Gasket
42	530-001952	O-Ring
43	530-001642	Cylinder Washer
44	530-001674	Cylinder Studs
45	* 530-019054	Oil Pump Body Gasket
46	530-010178	Oil Pump Body
47	* 530-023698	Pump Body Filter
48	530-023699	Diaphragm Spring
49	530-001660	Nut
50	530-002589	Oil Pick-up Weight
51	530-021012	Oil Line (Bulk 8132)
52	530-023148	Oil Pump Intake Valve
53	530-024677	Oil Line Protector Spring
54	530-030005	Spark Plug
55	530-012264	Cylinder
56	530-023356	Oil Pump Cap
57	530-023357	Oil Pump Plunger
58	* 530-019029	Quad Ring Plunger
59	530-023358	Oil Pump Spring
60	530-022124	Diaphragm Ass'y.
61	530-015114	Screw
62	530-010177	Pump Ass'y.
63	530-015137	Screw
64	* 530-019053	Pump Body Cover Gasket
65	530-011163	Oil Pump Cover

✓ = Part Change

*Indicates Engine Gasket Kit Contents

PARTS LIST NO. 530-067624 – 1/1/90		Poulan PRO™ PARTS LIST	CHAIN SAW MODEL: S25AV
Page No. 3	REPLACES NONE	Note: Illustrations may differ from actual models due to design changes.	

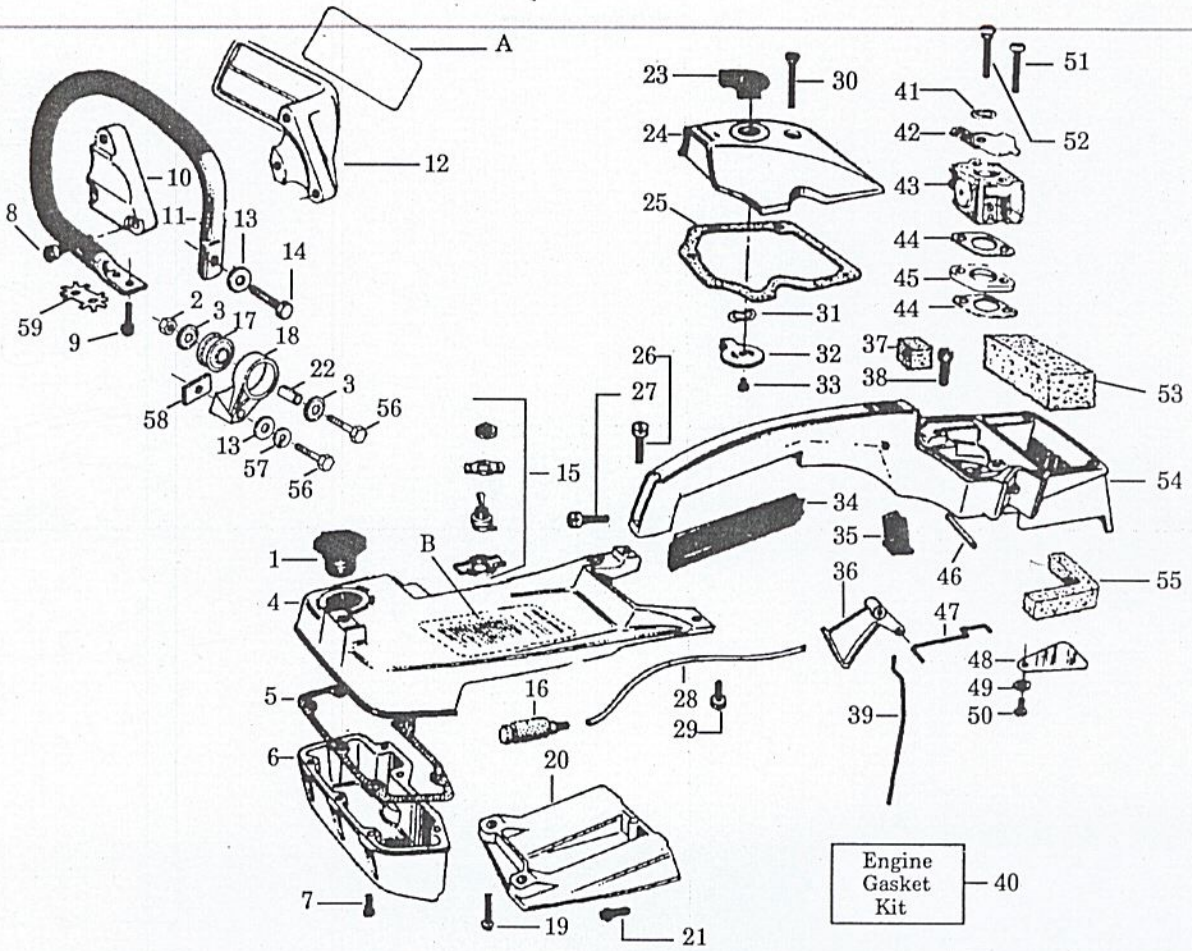

KEY NO.	PART NO.	DESCRIPTION	KEY NO.	PART NO.	DESCRIPTION
1	530-010123	Fuel Cap Ass'y.	32	530-023876	Choke Lever
2	530-015515	Nut	33	530-015407	Screw
3	530-025567	Cup Washer	34	530-024111	Handle Grip
4	530-012259	Fuel Tank Top	35	530-023362	Oil Pump Button
5	*530-019047	Fuel Tank Gasket	36	530-024672	Trigger
6	530-012260	Fuel Tank Bottom	37	*530-023373	Throttle Wire Boot
7	530-015138	Screw	38	530-001636	Screw
8	530-015509	Screw	39	530-023361	Oil Pump Push Rod
9	530-015839	Screw	40	530-069023	Engine Gasket Kit (*Indicates Contents
10	530-024049	Handguard Cap	41	530-015146	Wave Washer
11	530-022315	Front Handlebar	42	530-023841	Choke Shutter
12	530-024091	Handguard	43	530-035265	Carburetor
13	530-015151	Washer	44	*530-019045	Carburetor Gasket
14	530-015505	Screw	45	530-023872	Spacer
15	530-002582	Start/Stop Switch	46	530-015145	Trigger Pin
16	530-091878	Fuel Pick-Up Ass'y	47	530-023372	Throttle Rod
17	530-025566	Isolator	48	530-023366	Reed
18	530-028691	Isolator Mounting Bracket	49	530-023367	Washer
19	530-015152	Screw	50	530-015139	Screw
20	530-012258	Cylinder Shield	51	530-015257	Screw
21	530-001709	Screw	52	530-015256	Screw
22	530-025565	Spacer	53	530-023369	Air Filter
23	530-023376	Choke Knob	54	530-011548	Handle and Carburetor Hsg.
24	530-011558	Carburetor Cover	55	*530-023388	Dust Seal
25	*530-019074	Carb. Cover Gasket	56	530-015505	Screw
26	530-015141	Screw	57	530-001642	Lockwasher
27	530-015247	Screw	58	530-024317	Pad
28	530-069216	Line Kit (Bulk 8133)	59	530-028690	Retainer
29	530-015476	Screw			
30	530-015144	Screw	A	530-026849	Handguard Decal
31	530-015147	Wave Washer	B	530-027939	Instruction Decal

✓ = Part Change

*Indicates Engine Gasket Kit Contents

CARBURETOR ASSEMBLY CIQ–WZ–C1Q–W2A 530–035265

KEY NO.	PART NO.	DESCRIPTION
1	530–035272	Idle Low Mixture Screw
2	530–035273	High Mixture Screw
3	530–035274	Low/High Mixture Screw Spring
4	530–035275	Idle Adjust Screw
5	530–035276	Idle Adjust Spring
6	–	Carburetor Repair Kit
	530–035269	CIQ–WZ
	530–035288	C1Q–W2A
7	530–035270	Gasket/Diaphragm Kit

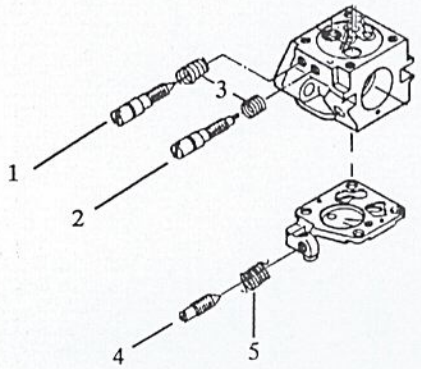

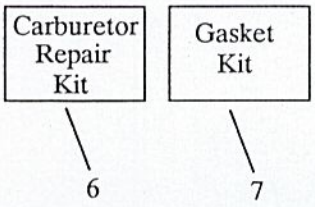

✓ = Part Change

*Indicates Engine Gasket Kit Contents