THE PIONEER

ONE MAN POWER CHAIN SAW

INSTRUCTION MANUAL *and* PARTS CATALOGUE

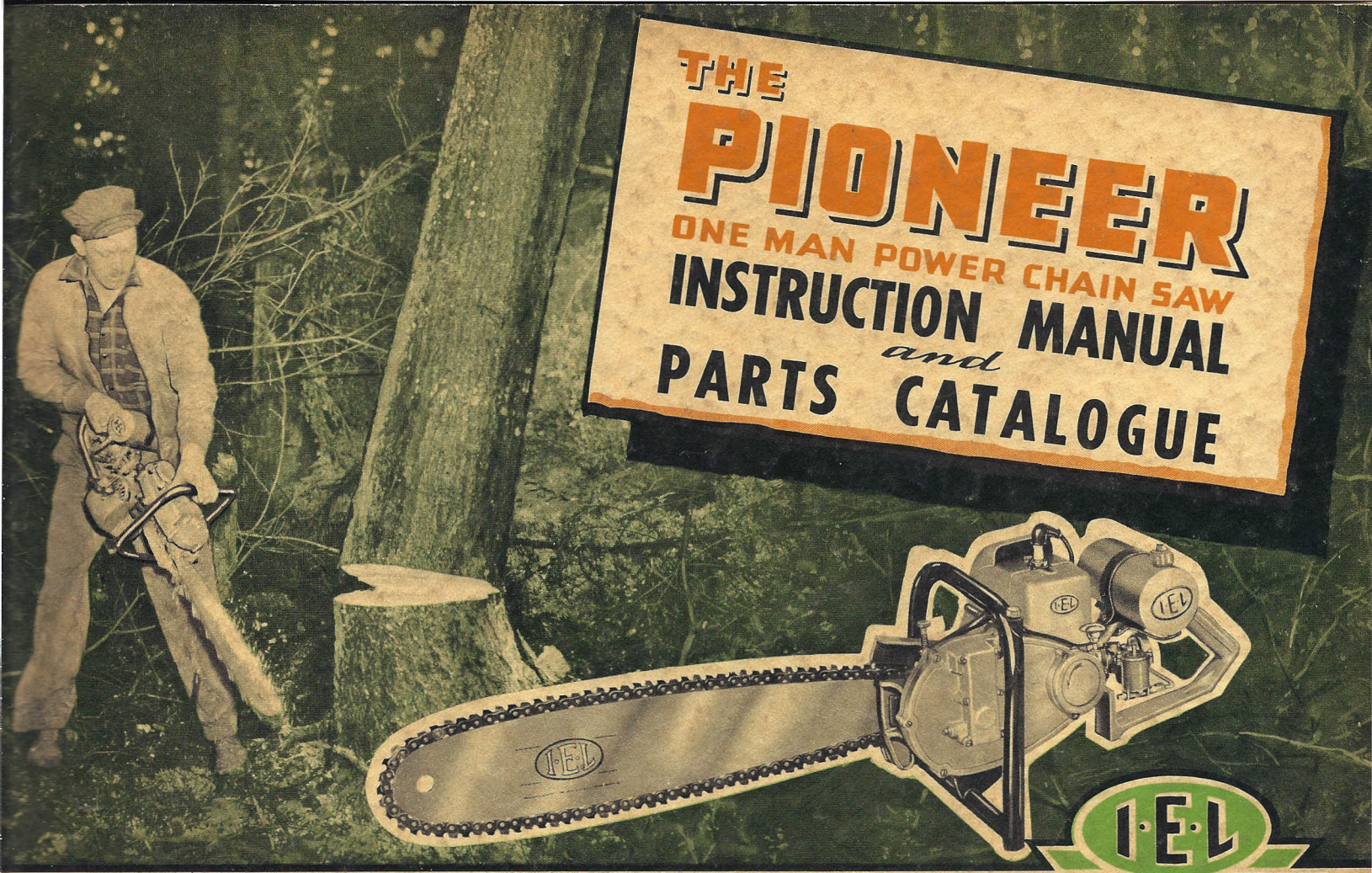

INDUSTRIAL ENGINEERING LIMITED

I·E·L
PIONEER
ONE MAN POWER CHAIN SAW

I.E.L. is proud to present the Pioneer, the latest one man power chain saw on the market today. The Pioneer, produced by the first makers of chain saws in America, represents many years of experience and research. Tested and retested, these machines are designed and built by our engineers and staff in close collaboration with the men who use this type of equipment. This new power saw has proved to be the ultimate in a labour saving machine for use in the logging and pulpwood industries. The Pioneer is also used to great advantage in many other industries, for cutting, mine props, railway ties, or general construction, etc.

I. E. L. Power Chain Saws are proudly offered by the owners, who work at the benches, lathes and desks. Any criticism, comment or suggestions that users may have to offer will be most sincerely appreciated in the spirit of co-operation.

100 PER CENT OWNED AND OPERATED BY THE EMPLOYEES

INDUSTRIAL ENGINEERING LIMITED
503 East Pender Street
Vancouver, Canada
Phone : HAstings 1760 - Cable, IEL

Eastern Division Office
158 Oak Street
North Bay, Ontario, Canada

U.S. Sales Representative
I.E.L. Power Saws, Inc.
1112 Westlake Ave. North, Seattle, 9, Washington

TO THE OWNER

Do not work the engine too hard for the first week of usage. Treat it as you would a new automobile. The PIONEER is precision manufactured in a modern plant, and is designed and built to do the work for which it is intended. Give it proper care, follow the instructions outlined, and it will give you satisfactory, reliable service. IT IS IMPORTANT to understand that this is a two-cycle motor and the only source of lubrication for the motor is the lubricating oil which is mixed with the fuel. Follow the instructions carefully, otherwise trouble is certain.

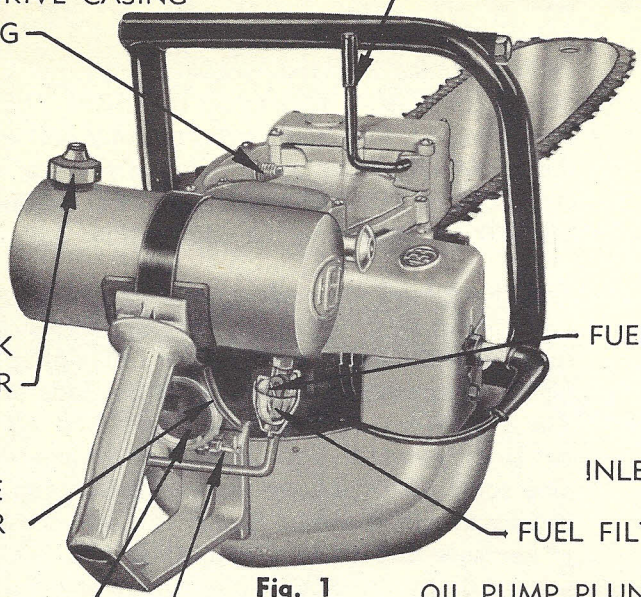

Fig. 1

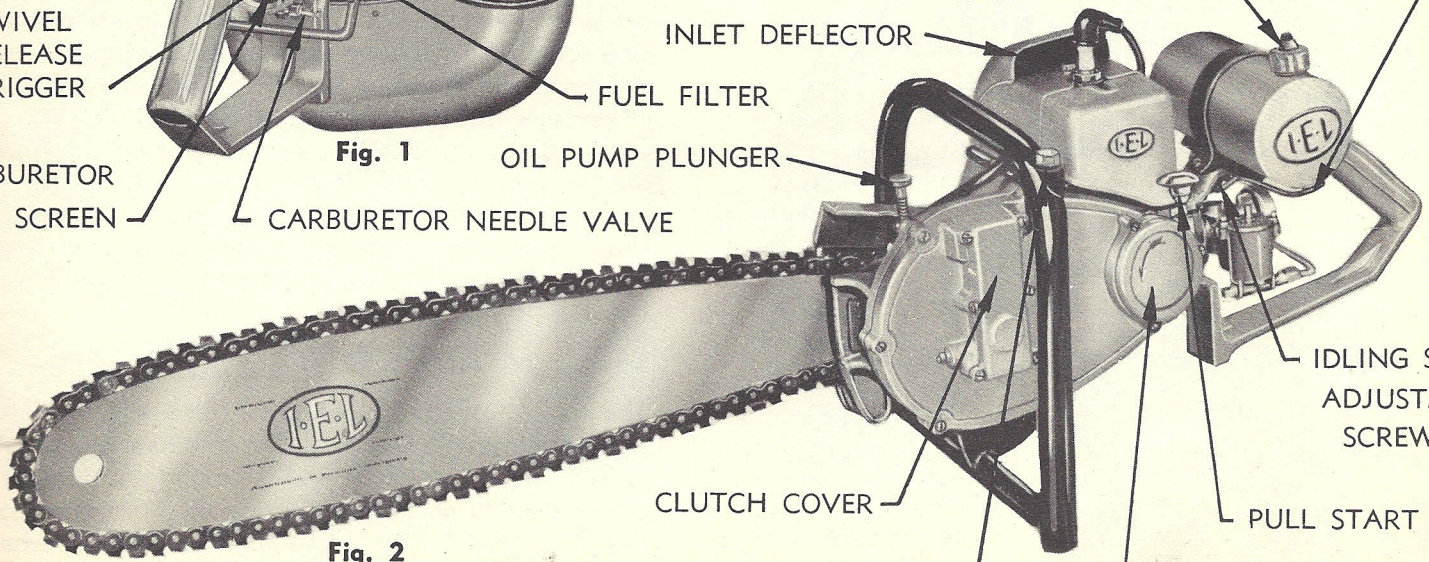

Fig. 2

Instructions for the Operation and Care of the Pioneer Chain Saw

PREPARATION FOR STARTING

The cutter bar and cutting chain should be fitted to the machine, first removing the three bolts and the strut plate. The cutter bar can then be bolted onto the machine between the facing on the main casting and the strut plate. The bolts should be almost tightened and the bar slid backwards to the fullest extent of the slots. To mount the chain on the bar, loop the chain approximately over the bar and strut, taking care that the cutting teeth are facing the machine on the underside. Then, fit the chain onto the sprocket carefully so that it meshes with the sprocket teeth properly. When this is done, the chain can be guided into the groove on the bar, and the bar pulled outwards to tighten up the chain. The three bolts must then be fully tightened carefully and evenly, after the chain tension is set by sliding the bar so that the chain can be lifted ¼ to ½ inch from the middle of the bar without stretching the chain. (Fig. 3.)

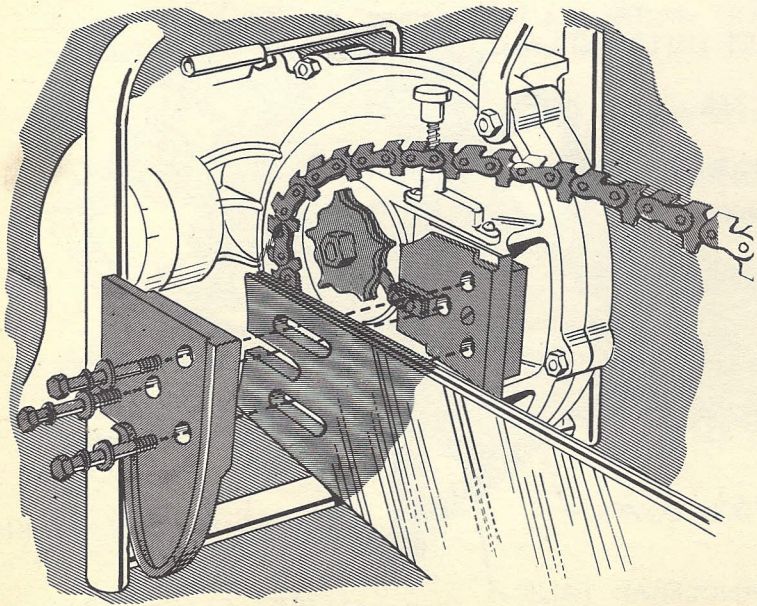

Fig. 3

The clutch and drive casing must be filled with SAE 20 lubricating oil (in cold weather, SAE 20W or 10 should be used, if the motor is stiff when starting) up to the level of the filler plug (Fig. 1) found in the side of the casing. The handle-bar tank (Fig. 2) should be filled with oil, sufficiently fluid to flow easily at prevailing temperatures. The same oil as is used for the drive casing is usually satisfactory. If the wood is pitchy, a half-and-half mixture of kerosene and lubricating oil should be used. This oil is sucked up by the small finger-operated pump (Fig. 2) at the front of the machine and forced into the cutter bar groove in order to oil the cutting chain. As soon as the chain is started, some oil should be applied with the pump, and the chain should never be allowed to run dry.

FUEL MIXTURE

The fuel tank (Fig. 1) should be filled with a mixture of high-grade gasoline (70 octane minimum) and SAE 60 or SAE 70 lubricating oil, in the proportions of **eight parts** of gasoline to **one** of lubricating oil when the motor is new. This can be decreased to 10/1 or 12/1 when the motor is well broken-in. The gasoline and oil should be well mixed in a separate, **clean** container and must be

thoroughly stirred with a paddle for proper mixing. Extra care should be taken when mixing in the winter, as cold oil is harder to mix. Always shake the mixture well before pouring into the tank, if it has to be standing for any length of time.

STARTING THE ENGINE

1. Open the fuel tank shut-off cock. (Fig. 1.)

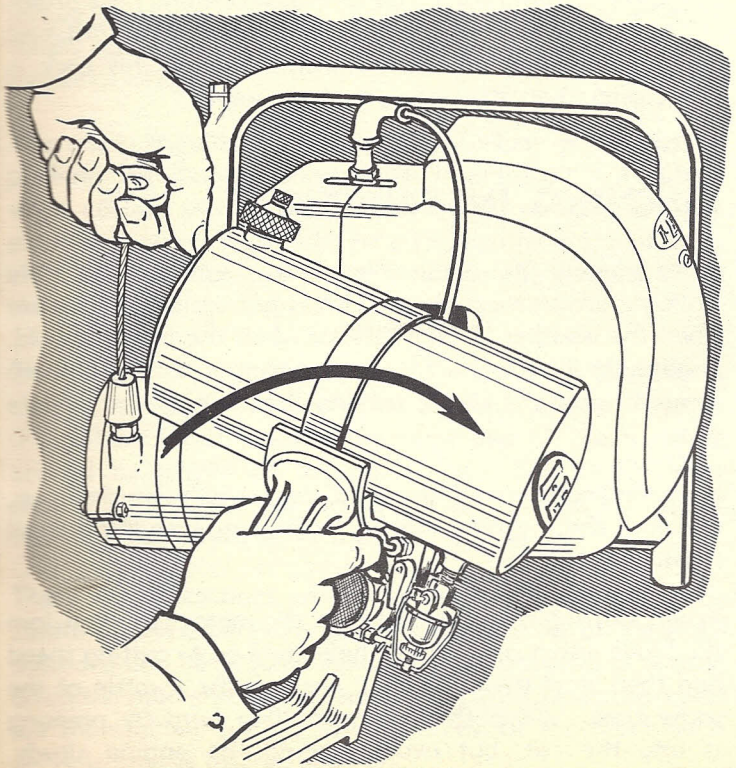

Fig. 4

2. Open the fuel tank vent. (Fig. 2.)
3. Set the needle valve (Fig. 1) on the carburetor about 1-1/2 turns open.
4. Swivel the rear handle well over to the right, first disengaging the swivel release trigger (Fig. 4) (this floods the carburetor). The machine should be tilted slightly forward when this is being done, but care should be taken not to hit the cutting chain on anything which will damage the teeth.
5. Straighten the rear handle after about 20 seconds, and open the throttle (Fig. 2) about 1/4 to 1/3. Disengage the clutch.
6. Pull the pull-start knob (Fig. 4) easily until engagement is felt, and then give the knob a firm, solid pull, moving the hand between one and two feet. To return the knob, move the hand back to the housing, allowing the cable to re-wind itself.
7. After the engine has warmed up, the needle valve should be readjusted while the saw is cutting, to around one turn open. (See further notes on this point.)

STOPPING THE ENGINE

The idling throttle stop is spring loaded, so the throttle may be closed completely by pushing down on the throttle lever. It should be noted that the engine may keep running for a second or so on the fuel it already has in the crankcase.

If this arrangement is out of adjustment, the engine may be stopped by tilting the machine, or the rear handle, well over to the left, alternatively the carburetor needle valve may be closed.

If the machine is going to be left standing for a long time, it is advisable to turn the fuel off and let the carburetor empty itself.

NOTES ON STARTING

If the motor does not respond to the first pull and a second also does not produce results, further flooding may be necessary and points 4, 5 and 6 should be repeated. The colder the weather and the colder the machine, the more flooding is needed. It is almost impossible to overflood the engine when it is dead cold, but excessive flooding when warm will prevent a start. If overflooding is suspected, open the drain cock (Fig 5, B 11) on the underside of the crankcase and pull the motor over a few times, then close the cock.

If the motor is to be left to stand for a long time, it is best to run the carburetor dry by shutting off the gasoline and letting the motor run. If this is not done, the gasoline evaporates leaving the lubricating oil behind, and the engine gets a large slug of almost straight lubricating oil when a start is attempted.

If the pull-start fails to operate, there is an auxiliary starter pulley (Fig. 5) on the right hand side of the machine which can be reached by removing the inlet deflector which is held in place by a single screw. A starting rope is supplied for use with this pulley.

TROUBLE IN STARTING

1. Make sure that there is fuel in the tank, that the shut-off cock is open, and that the fuel tank vent is open.
2. Check the needle valve setting on the carburetor.
3. Swivel the rear handle over half way with the machine tilted a little backwards, and fuel should drip out of the breather on the carburetor. If it does not, then fuel is not reaching carburetor. Most likely the fuel filter is choked, alternatively (see 1 and 2 above).
4. Check ignition by removing spark plug and attaching ignition wire to plug with the body of the plug touching the engine. A fat blue spark should appear when the pull-start knob is pulled. If the spark is not good, hold the wire alone about 1/8 inch from the engine and pull the engine over. If a good spark appears then the plug is faulty. If the spark is poor (see under **Magneto Timing and Adjustment).**
5. Over-flooding can be corrected by opening base drain-cock and turning motor over a few times until. fuel stops coming out of the drain. Be sure this cock is closed when attempting to start motor.

RUNNING INSTRUCTIONS

After starting the motor, allow it to warm up for a little while before starting to cut. This is particularly important when the weather is very cold, or when the motor is cold. Engage the clutch lever to start cutting chain, and pump some oil onto the chain, leaving it running for a minute or so.

Keep the motor speed low when warming the machine up, and look the machine over to make sure everything is all right.

When starting a cut, do not race the motor and then jam the blade into a cut. Bring the engine up to cutting speed and then start the cut easily, opening the throttle at the same time. Keep the engine pulling hard by pressing it into the cut, but avoid lugging the engine slowly, as far as possible. The good operator is noticeable in the

way he keeps the engine speed steady. A slight rocking motion to the blade gives the operator more "feel" as to what is happening in the cut and also eases the load on the engine, giving faster cutting. The clutch is designed to slip slightly if a sudden overload is applied, which reduces the shock load on the machine. If this happens, ease the load on the motor momentarily, to allow the clutch to lock again and then proceed with the work. The reason for doing this is that it is necessary to reduce the torque on the clutch to about thirty percent below the torque at which it slipped in order to allow it to engage solidly again. Once solidly engaged, it will carry the same torque as before.

The chain should be oiled regularly when in the cut by pushing the plunger downwards. If extra oil is required when cutting pitchy wood, or when the chain is dry, an extra long pump stroke can be given by lifting the plunger knob up and then pushing it down to the bottom of its stroke.

The change from the bucking to the felling position is accomplished by pulling the Swivel Release Trigger (Fig. 4) and then turning the front end of the machine around by means of the handle-bar. The clutch lever should be brought around at the same time so that it can be reached easily in the felling position.

There are 8 positions on the swivel to allow angle, horizontal and vertical cutting. Swivelling to any of the eight positions can be accomplished without stopping or setting down the machine, if the rear handle, tank and carburetor are maintained upright while the rest of the machine is swivelled to the desired position.

It is best to adjust the carburetor needle valve when the machine is cutting. The setting is somewhere between 3/4 turn and one turn open. When adjusting only move about 1/8 turn at a time and wait for a while before adjusting further. This wait is particularly important when closing the valve, as if the engine has been getting too much fuel it carries a lot in the crankcase and can run on this fuel for quite a little while, thus the needle valve can be closed too far without the engine responding to this shortage in fuel until some time later.

GENERAL CARE OF THE MACHINE

1. Keep the machine clean and free of sawdust.
2. Clean the carburetor air screen (Fig. 1) regularly.
3. Clean the fuel filter (Fig. 1) regularly.
4. At regular intervals, remove the blower shroud and clean dirt and sawdust from cylinder and head fins.
5. Check the oil level in the drive case weekly.
6. Check the tightness of all nuts and bolts on the machine regularly.
7. Keep the exhaust ports free from carbon.
8. Wash out the fuel tank if a lot of dirt appears in the filter.
9. Keep the cutting chain sharp, and properly jointed and set.

In some instances above, how often the job should be done is not given, because circumstances of operation vary the necessity for the work considerably. If a point is checked and found O.K. then the interval between jobs can be lengthened, conversely if, say, the air filter is found to be very dirty, it should be cleaned more often.

CLUTCH ADJUSTMENT

The clutch adjustment can be reached by removing the rectangular cover (Fig. 2) on the side of the clutch housing. A slotted screw, held with a jam nut, will be found. This screw should be adjusted so that a slight amount of play is felt in the clutch lever before it starts to operate the clutch.

If the clutch fails to release, there is probably too much play, and the slotted screw should be screwed inwards until the excess play is removed. Too heavy, or very cold oil in the drive casing will cause the clutch to drag.

If the clutch slips excessively, the slotted screw is probably too far in, and it should be backed off until a slight amount of play is felt. It should be noted that the clutch is designed to slip slightly if the motor is suddenly stalled in the cut, thus reducing the shockload on the machine, but it should not slip under any ordinary cutting conditions.

PULL-START MAINTENANCE

If the cable becomes broken or frayed, it should be replaced as follows:

Remove the three screws holding the Pull-Start cover (Fig. 2) in place. Since this cover holds one end of the return spring, it will snap around when the screws are removed. Pull the cover off gently, and, if the spring does not come with it, insert a screw driver or flat piece of metal and ease the centre of the spring off the spindle.

If the cable is damaged, pull it out of the starter to the fullest extent (it will not return when released as the spring has been removed) and then remove the knob by first pushing the cable into the knob from underneath when the cable and locking block will then come out of the hole in the top. It will be obvious then how to release the block, knob, and rubber stop from the cable, but it should be examined carefully so that the new cable can be put back in the same manner.

With the cable freed from the knob, it can then be pulled free of the starter by catching hold of the brass nipple (which can be seen protruding through the aluminum pulley once the cover is removed) and pulling the cable backwards through the pulley and the guide hole in the casing. If the cable has broken off inside the drum, it can still be pulled out by means of the nipple. If it shows a tendency to stick when being pulled out, this can be overcome by pushing it back in slightly, and rotating the pulley at the same time, then pulling the cable further out. With the old cable removed, the new cable can easily be threaded through the pulley and out of the guide hole, pulling it completely through. The rubber stop, the knob and the locking block can then be replaced. The pulley should then be turned clockwise, winding the cable onto itself fully, and then the starter cover and spring fitted by entering the flat on the inside of the spring into the slot on the outer end of the driver. Before screwing the cover down, it should be turned **clockwise a half to two-thirds of a turn** to apply sufficient tension to return the cable.

NOTE.—More turn than this will overload the spring causing breakage.

.f the pull-start cable comes out and returns satisfactorily and yet the mechanism fails to turn the motor over, it is probable that the Pawls or Springs inside are worn or damaged. To replace these, the following procedure is necessary:

Turn the machine over on its side with the pull-start uppermost. (The rear handle should be swivelled upright at the same time.) Remove the seven bolts which hold the drive cover in place and lift the cover off gently. The entire mechanism then becomes visible.

Having replaced the necessary parts, the cover should then be lowered gently into place using a couple of the bolts to line it up. Pull the starter rope out a foot or so and then release it slowly—this allows the driver to push the pawls aside and drop into its correct place. Then bolt the cover on, tightening down evenly and fill the casing with oil to the correct level.

NOTE: If it is necessary to remove the driver (which is the notched part which engages with the pawls) it should be remembered that this screws into the starter pulley with a **left-hand thread,** and therefore must be turned opposite to the usual unscrewing direction.

CLEANING THE EXHAUST PORTS

The necessity for cleaning the carbon from the exhaust ports varies considerably, and depends on the fuel and oil used, how well it is mixed, the carburetor setting, etc. However, once a month should be adequate.

To clean the exhaust ports, first remove the exhaust manifold by unscrewing the two screws (Fig. 5) holding it in place. Three circular ports in the cylinder will then become visible. Remove the spark plug and turn the motor over until the piston is at the bottom of the stroke and then clean off any carbon on the ports with a piece of hardwood. Try to avoid getting the carbon into the cylinder as far as possible and blow the carbon out before re-assembling.

CLEANING THE COOLING FINS

The dirt accumulated on the cooling fins of the cylinder and head should be removed regularly. The shrouding should first be removed and the accumulated dust and dirt cleaned out with a brush.

CARBURETOR ADJUSTMENT

The adjustment of the main jet is dealt with previously, and the only other adjustment is for idling.

There are two adjustments for idling, the idling mixture adjustment (Fig.11, Part 06910), which is a small screw on the right hand side of the carburetor, near the air intake. This screw is fitted with a lock nut which should first be slacked before testing the screw. The screw should be around a quarter turn open.

The other idling speed adjustment (Fig. 2) sets the opening of the throttle in the idle position and is to be found just in front of the fuel tank in the aluminum handle. This screw also has a lock nut, and screwing downwards makes the motor run faster, upwards for slower.

REED VALVE MAINTENANCE

The reed valve should be examined at regular intervals and is reached by removing the four nuts (Fig. 10) holding the swivel plate AB209 and rear handle in position. Inside the reed valve body AB208 (Fig. 10) the reed valve and reed valve spring will be found. These should be examined carefully for wear, not forgetting the valve seat and guide faces in the body. If wear is noticeable, the worn parts should be replaced. If fuel blows back on the

operator's hand from the carburetor air intake, or the machine fails to run, even though fuel and ignition seem to be correct, the reed valve should be checked.

MAGNETO TIMING AND ADJUSTMENT

To get at the magneto, first remove the cylinder shroud and blower housing and then remove the flywheel. The flywheel is removed by first unscrewing the auxiliary starting-rope pulley. This pulley has a right-hand thread and can be turned with a bar inserted in one of the slots.

Do not unscrew it completely, but back it off two turns and then loosen the flywheel (which is mounted on a taper) by pulling the flywheel outwards, hitting pulley with block of wood or a soft hammer. Then unscrew the pulley completely and remove the flywheel, watching for the key which drives the flywheel.

The magneto contact breaker is the only working part and it is actuated by a cam mounted on the crankshaft. The cam, SB25C, (Fig 7) should be lubricated every 500 hours by a very slight smear of vaseline on the wick.

All connections and wires should be clean and dry. All screws should be tight. The wire to the spark plug should be clean and free from cracks or openings in the insulation. The rubber grommet leading the ignition wire out of the magneto casing should be in good condition.

The contact points must be clean and free from corrosion, and the gap, when open, should be .020 inches. The points can be cleaned by slipping a piece of paper in between them when they are open and then turning the engine around so that the points close. The paper is then pulled out.

The magneto timing is adjusted by slackening the twc screws holding the brass plate onto the housing, the whole assembly can then be turned anti-clockwise for advance, clockwise for retard. The actual timing of the spark is 27 degrees before Top Dead Centre and this is obtained when the mark on the edge of the brass plate is opposite the mark on the aluminum housing.

CUTTER BAR MAINTENANCE

The cutter bar should be removed and turned over from time to time in order to distribute the wear on both sides of the bar. As wear takes place, a sharp edge is left on the extreme edge of the bar and this should be removed with a file when it becomes noticeable. The groove should be periodically cleaned of sawdust, particularly the oil hole to permit free passage of oil from the pump.

Parts List

AB-21	Exhaust manifold
AB-22	Exhaust manifold gasket
AB-61	Outlet deflector
AB-62	Inlet deflector
AB-71	Handlebar
AB-88	Strut
AB-90	Cutter bar (specify length)
AB-92	Sawing Chain " "
AB-93	Right raker
AB-94	Centre raker
AB-95	Left raker
AB-100	Hinge pin
AB-134	Hinge pin spring
SB-82	Blower shroud
SB-163	Manual starter pulley
B-11	Drain cock
B-34	Spark plug cover
B-49	Elbow
B-71D	Oil filler plug
B-96	Right side cutter
B-97	Left side cutter
B-98	Side link
B-99	Rivet
B-101	Cylinder base stud
B-136	Cylinder base nut
B-162	Cutter bar retaining bolt
HNF-4	¼ SAE nut
HCF-4-1	Handle bar bolt
RHMC-4-⅝	Exhaust manifold screw
RHMC 4-1-¾	Shroud holding screw
RHM 1024-½	Shroud holding screw
CP1-½	Cotter pin
ESPW 4	Shroud holding washer
ESPW 10	Star washer
SLW-4	Lock washer
SLW-5	Bar retaining bolt lock
SW-5	Bar retaining bolt washers
SW-10	Washer
SAEW-4	Shroud holding washer

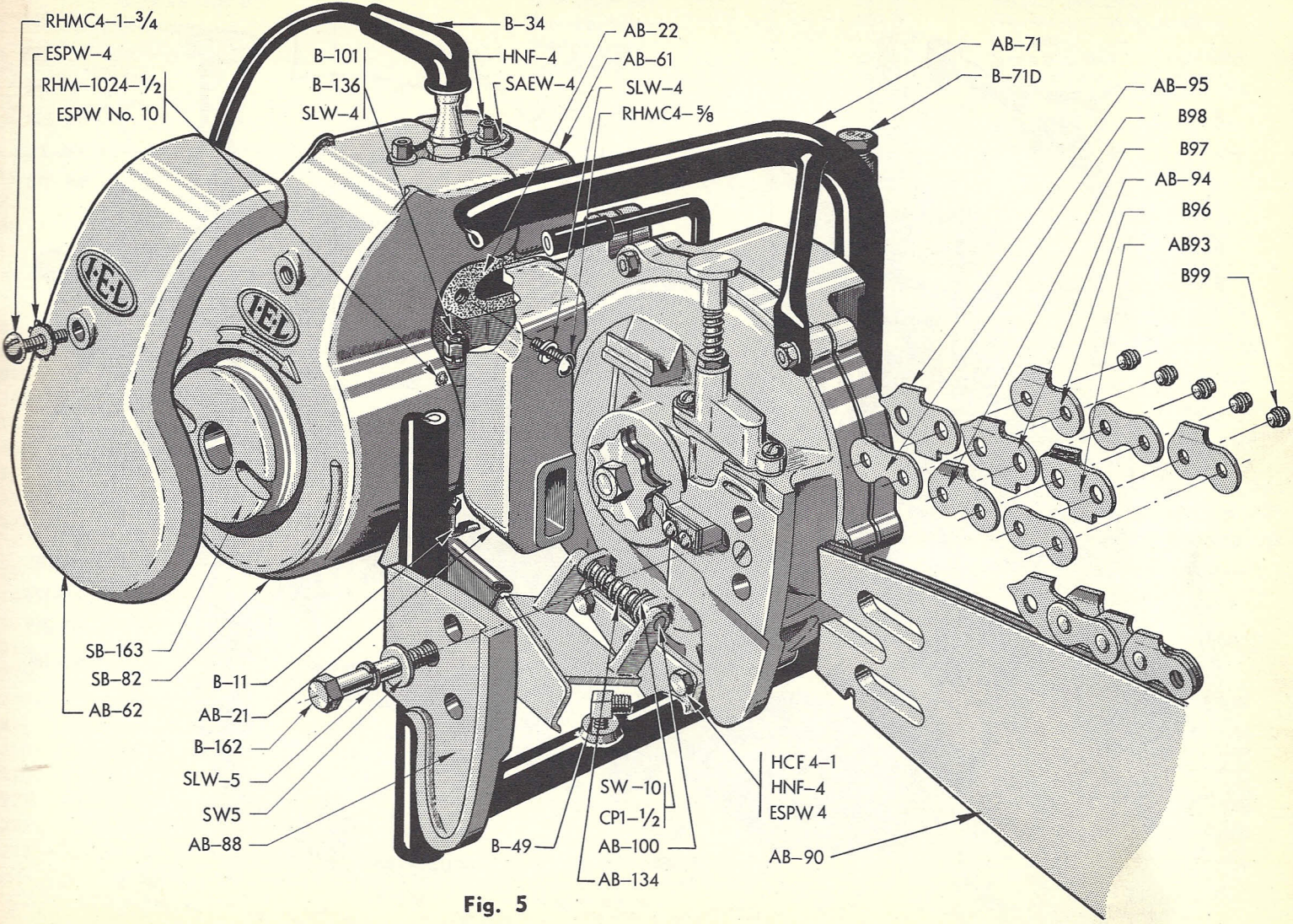
RHMC4–1–3/4
ESPW–4
RHM–1024–1/2
ESPW No. 10
B–101
B–136
SLW–4
B–34
HNF–4
SAEW–4
AB–22
AB–61
SLW–4
RHMC4–5/8
AB–71
B–71D
AB–95
B98
B97
AB–94
B96
AB93
B99
SB–163
SB–82
AB–62
B–11
AB–21
B–162
SLW–5
SW5
AB–88
B–49
SW–10
CP1–1/2
AB–100
AB–134
HCF 4–1
HNF–4
ESPW 4
AB–90

Fig. 5

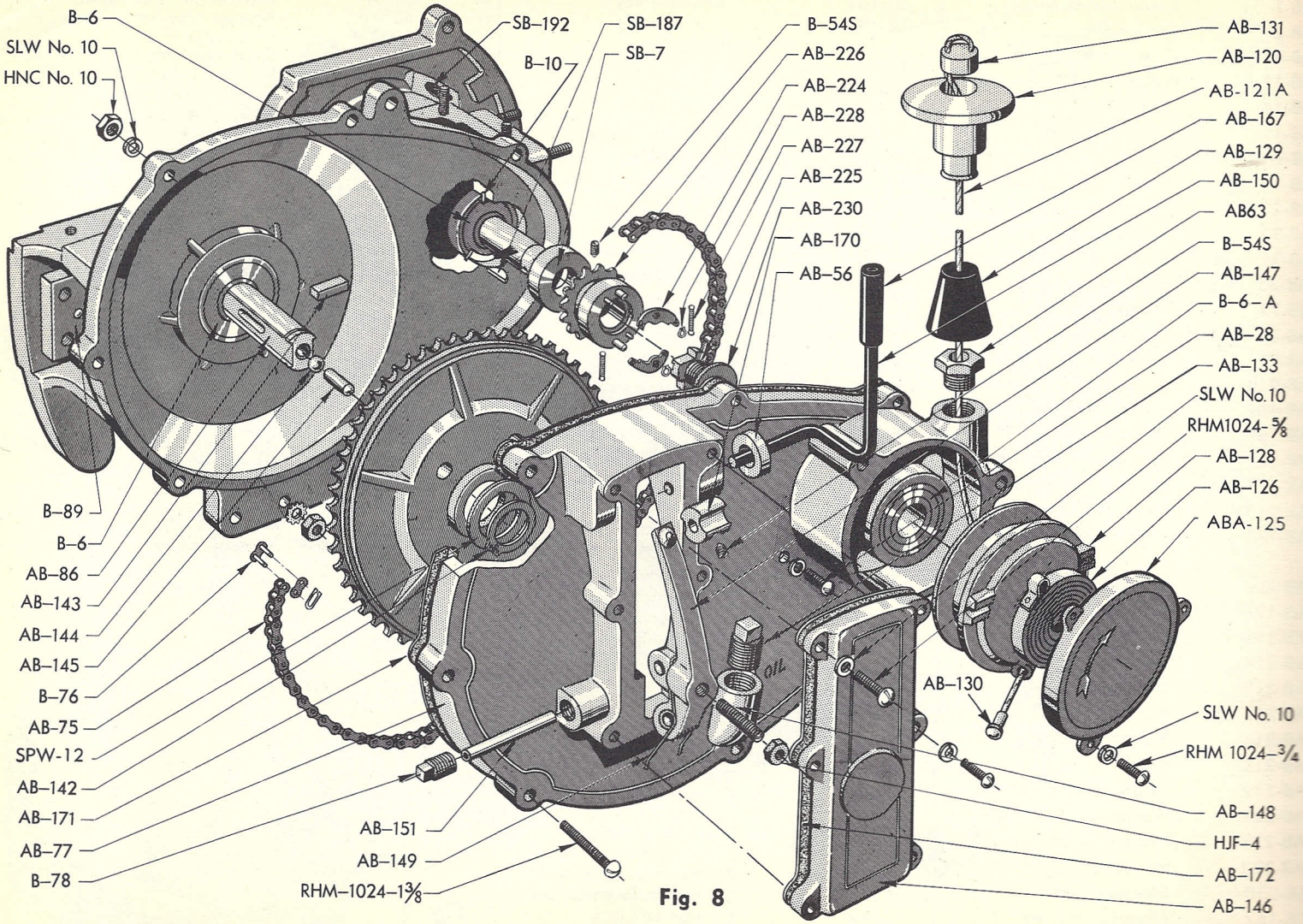
B–6
SLW No. 10
HNC No. 10
SB–192
B–10
SB–187
SB–7
B–54S
AB–226
AB–224
AB–228
AB–227
AB–225
AB–230
AB–170
AB–56
AB–131
AB–120
AB-121A
AB–167
AB–129
AB–150
AB63
B–54S
AB–147
B–6–A
AB–28
AB–133
SLW No.10
RHM1024-5/8
AB–128
AB–126
ABA-125
B–89
B–6
AB–86
AB–143
AB–144
AB–145
B–76
AB–75
SPW-12
AB–142
AB–171
AB–77
B–78
AB–151
AB–149
RHM–1024–1 3/8
AB–130
SLW No. 10
RHM 1024–3/4
AB–148
HJF–4
AB–172
AB–146
OIL

Fig. 8

AB-28	Vent screw
AB-56	Clutch lever seal
AB-63	Starter rope bushing
AB-74	Clutch sprocket assembly (sold only with corks and needle race complete)
AB-74B	Clutch sprocket cork inserts
AB-74C	Clutch needle bearing
AB-75	Drive chain
AB-77	Chaincase cover
SPW-12	Clutch washer
AB-86	Clutch shaft
AB-120	Starter Handle
AB-121A	Starter rope to be supplied complete with ferrule AB-130
ABA-125	Starter cover (to be supplied complete with pin AB-127)
AB-126	Starter rewind spring
AB-128	Starter pulley
AB-129	Starter buffer
AB-130	Starter rope ferrule
AB-131	Starter rope anchor
AB-133	Oil level plug
AB-138	Clutch plate assembly
AB-139	Clutch thrust plate (inner)
AB-140	Clutch thrust plate (outer)
AB-141	Clutch spring (to be supplied in sets of 4 only)
AB-142	Clutch retaining clip
AB-143	Clutch thrust key
AB-144	Thrust ball
AB-145	Thrust pin
AB-146	Clutch cover
AB-147	Clutch arm

AB-148	Clutch arm adjust'g screw
AB-149	Clutch arm spring
AB-150	Clutch release lever
AB-151	Hinge pin for clutch arm
AB-167	Clutch release lever grip
AB-170	Clutch cam
AB-171	Chaincase cover gasket
AB-172	Clutch cover gasket
AB-174	Clutch needle race
AB-224	Starter pawl (2 used)
AB-225	Starter driver
AB-226	Crankshaft sprocket
AB-227	Starter pawl spring (2 used)
AB-228	Starter pawl clip (2 used)
AB-230	Driver washer
SB-7	Drive end seal
SB-187	Crankshaft key
SB-192	Grommet
B-6	Main bearing (4 used)
B-6A	Bearing for starter pulley
B-10	Retaining clip
B-54S	Clutch cam set screw (also sprocket)
B-76	Connecting link
B-78	Plug for hinge pin
B-89	Combination nut
HJF-4	Clutch arm ad. screw nut
SLW No.-10	Clutch cover washers
RHM 10-24-5/8	Clutch cover screws
RHM 10-24-3/4	Rewind cover screw
RHM 10-24-1 3/8	Chaincase cover screws
HNC No. 10	Chaincase cover nuts

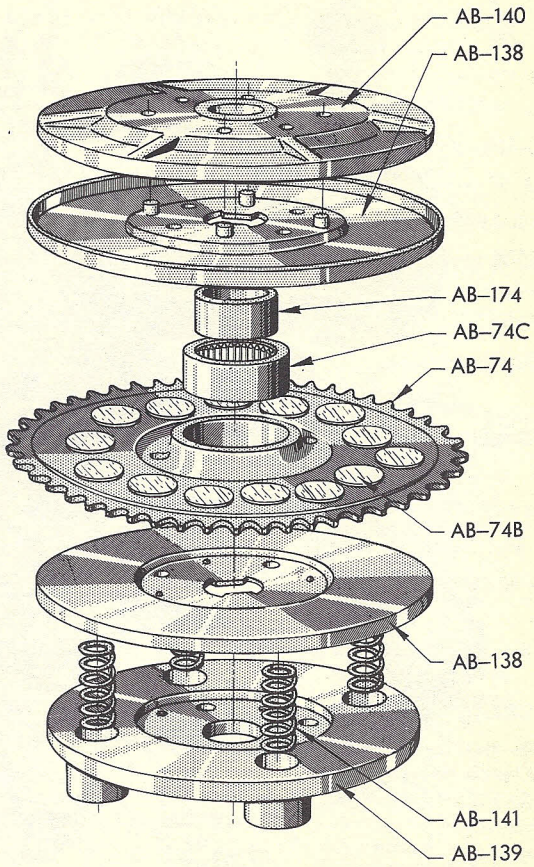

Fig. 9

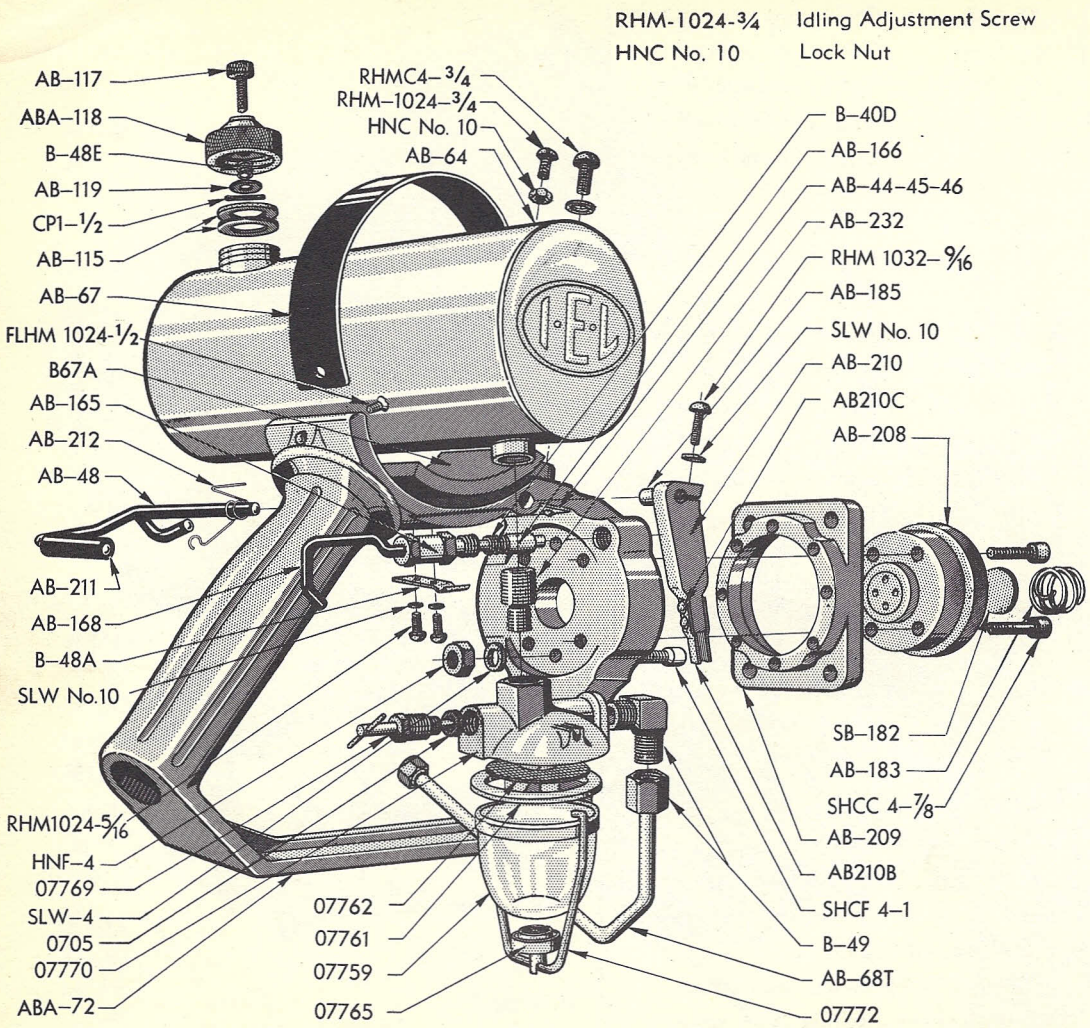

Fig. 10

AB-44-45-46	Throttle stop spring washer and rivet
AB-48	Throttle rod
AB-64	Tank
AB-67	Tank holding band
AB-68T	Fuel Line
AB-115	Gas tank cap gasket
AB-117	Air vent valve
AB-119	Vent washer
AB-165	Swivel lock body
AB-166	Swivel lock pin
AB-168	Swivel lock trigger
AB-183	Reed valve spring
AB-185	Throttle rod spacer
AB-208	Reed valve body
AB-209	Swivel ring
AB-210	Rocker arm lever assy.
AB-210B	Spring
AB-210C	Rivet
AB-211	Throttle grip
AB-212	Throttle spring
AB-231	Filter complete
AB-232	Filter adapter
0705	Shut-off valve packing
07759	Strainer bowl
07761	Strainer gasket
07762	Strainer screen
07765	Cup and thumb nut
07769	Shut-off valve
07770	Strainer cover
07772	Clamp wire and stud
ABA-72	Rear handle
ABA-118	Gas tank cap assy.
SB-182	Reed valve
B-40D	Swivel lock spring
B-48A	Throttle clip
B-48E	Spring
B-49	Compression elbow
B-67A	Felt cushion
CP1-1/2	Split pin
FLHM-1024½	Tank holding screw
HNF4	Carburetor nuts
RHM1024-5/16	Throttle clip screw
RHM-1032 9/16	Screw
RHMC4¾	Tank clamp
SHCC4-7/8	Cap screws
SHCF4-1	Carburetor cap screws
SLW4	Carburetor washers
SLW No. 10	Lock washer

ABA 47 Carburetor complete with Air Filter

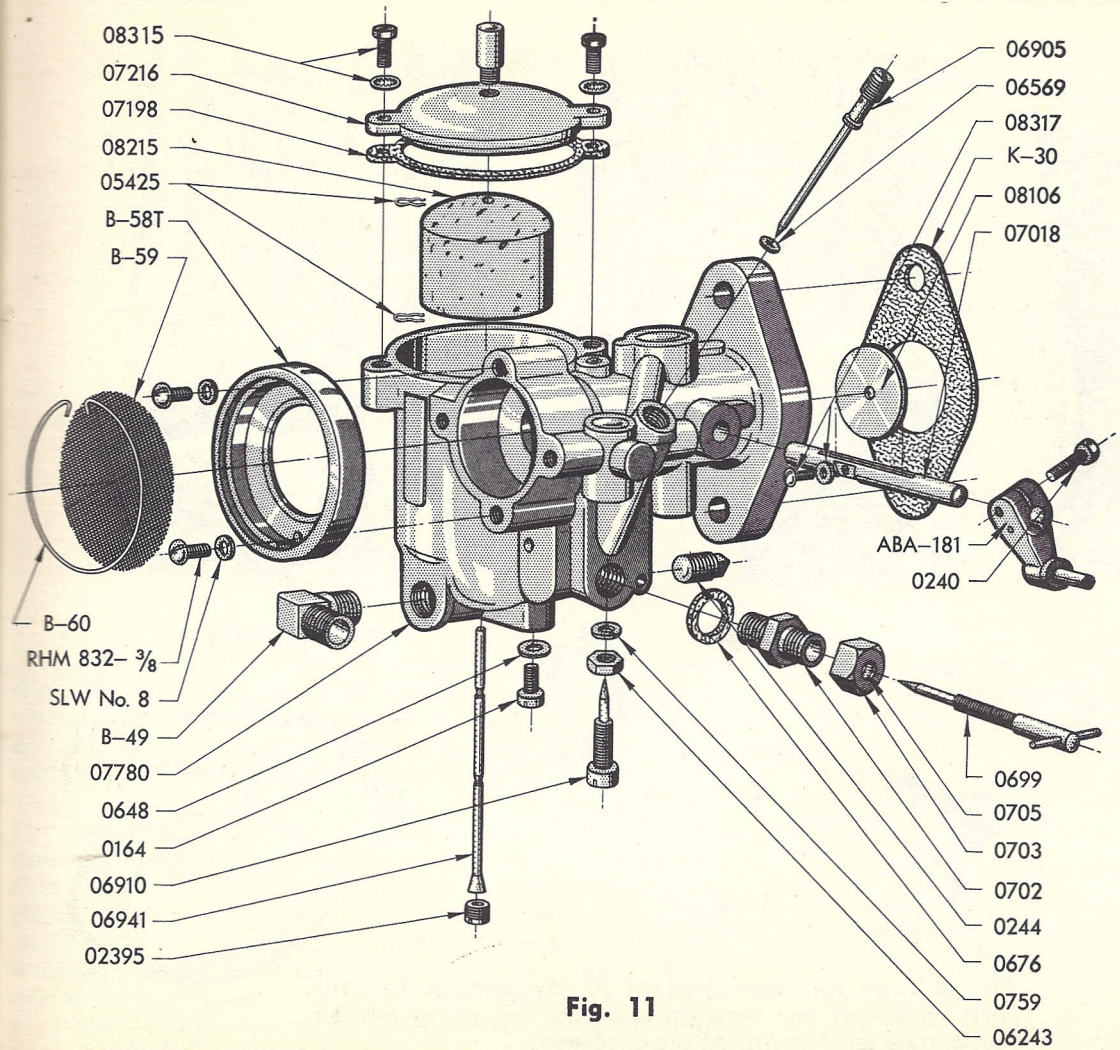

Fig. 11

07216	Float bowl cover
08315	Float bowl cover screw and lockwasher
05425	Float bowl retaining cotter pin
07198	Float bowl cover gasket
08215	Float
07780	Body
06941	Inlet valve, seat and gasket
02395	Inlet valve channel plug screw
06910	Idle adjustment screw
06243	Idle adjustment screw locknut
0759	Idle adjustment screw lockwasher
0676	Main adjustment screw gland gasket
0702	Main adjustment screw gland
0703	Main adjustment screw packing nut
0705	Main adjustment screw packing
0699	Main adjustment screw
0244	Body channel pipe plug
07018	Throttle shaft
08317	Throttle shutter screw and lockwasher
08106	Throttle shutter
ABA-181	Rocker arm with pin
0240	Rocker arm screw
K-30	Carburetor gasket
06905	Idle tube
06569	Idle tube gasket
B-49	Compression elbow with nut and ferrule
B-58T	Air screen bowl
B-59	Air screen
B-60	Air screen clip
SLW No. 8	Air screen lock washer
RHM832-3/8	Air screen screws
0648	Gasket
0164	Screw

THE PIONEER IS AN IDEAL SAW FOR ONE MAN OPERATION IN FALLING, BUCKING AND UNDERBUCKING, PROFICIENCY IN THESE OPERATIONS INCREASES WITH EXPERIENCE

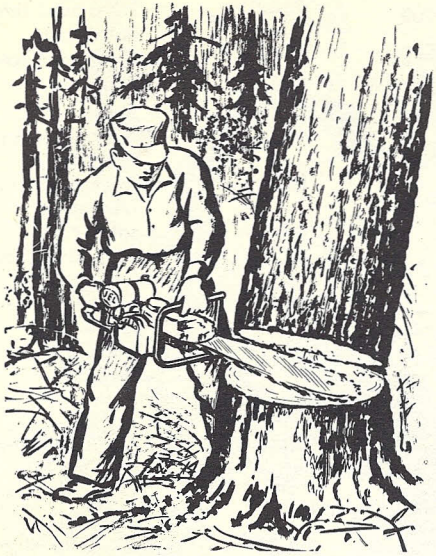

FALLING

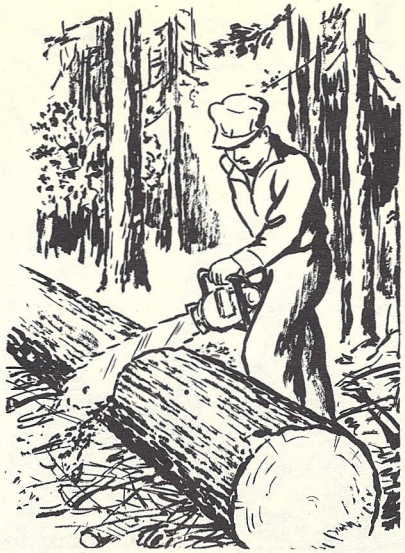

BUCKING

UNDERBUCKING

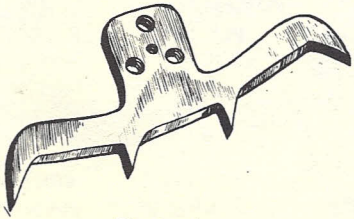

B-137 Pivot grip

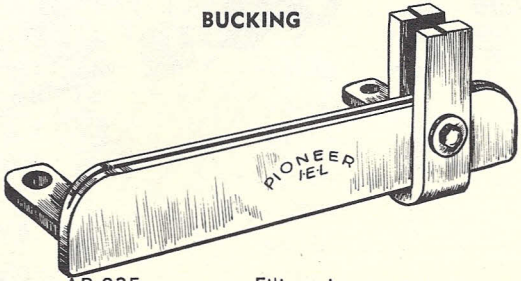

AB-235 Filing vise
AB-233 Jointing block

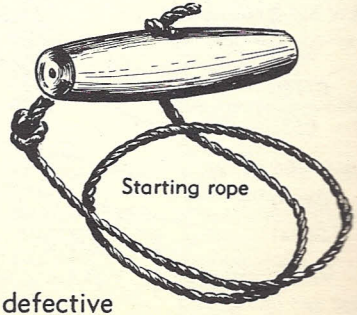

B-161

Guarantee :

All machines are guaranteed for 30 days against defective parts, provided our recommendations regarding lubrication and general operation are observed.

INSTRUCTIONS FOR FILING I.E.L. UNIVERSAL CUTTING CHAIN

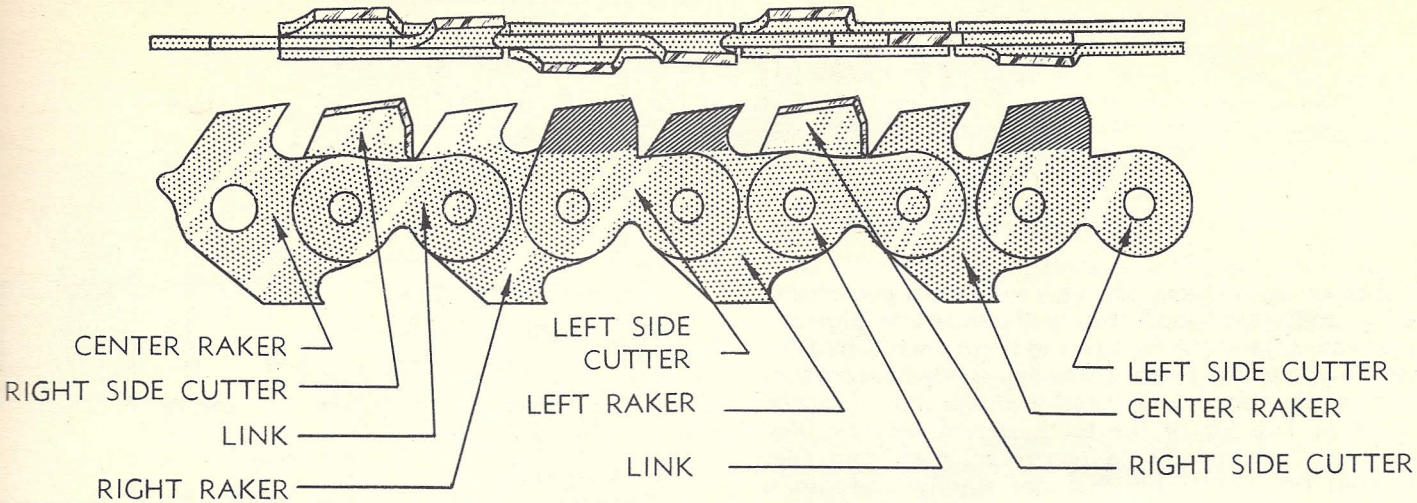

PIONEER CHAIN SEQUENCE
Fig. 1A

The chains leave the factory accurately ground, so that they will cut clean and fast in any type or condition of wood. This new Universal chain is the result of a large amount of research work and is considerably faster and more versatile than anything previously produced.

For ready reference, Fig. 1A shows the names and sequence of the teeth. It will be noticed that there are two side cutters, left and right, which run on the outside of the chain. These cutters cut through the end grain of the wood and it is the function of the rakers to remove the wood which has been cut off by the side cutters. There are three rakers, which are identical except that the two of them are set over to the left and the right, in order to cover the full width of the cut.

The two side cutters are filed identically, and the three rakers are filed identically, thus the chain has only two different teeth to file.

SHARPENING

A Filing Vise is available at small cost, and this is shown in Fig. 2A. This vise may be mounted on a bench or a log, or else held in an ordinary bench vise. A sharp 8" flat file and a 6" rat-tail file are necessary.

The chain may be touched up while mounted on the machine, but it is more convenient and more accurate to work with a filing vise.

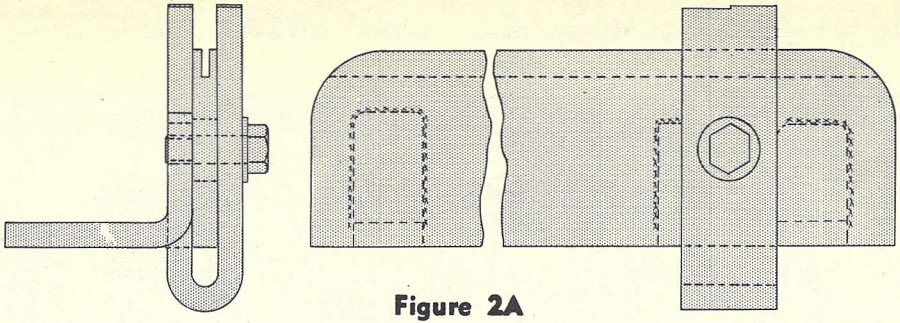

Figure 2A

When sharpening a chain, one very important point must be clearly understood, and this is illustrated in Fig. 3A. As shown, only the front face of the tooth should be filed and not the top of the tooth. If the top is filed excessively the sawdust clearance is reduced and the cutting speed slowed down. The top of the teeth should only be filed when jointing, which will be described later. The filer should hold his file firmly but not rigidly and use a straight smooth thrust, otherwise the tooth will have a rounded face and the cutting edge will not be sharp. This rounded effect will be noticed by different light shades on the tooth. There should be only one shade to a properly filed tooth.

When filing the side cutters, care must be taken to maintain the face angles properly. The cutting edge slopes backwards at a 17-degree angle and also is bevelled inwards at 45 degrees, as shown in Fig. 6A.

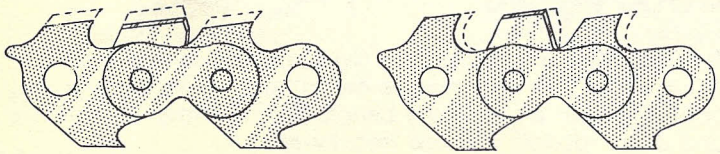

INCORRECT CORRECT

Figure 3A

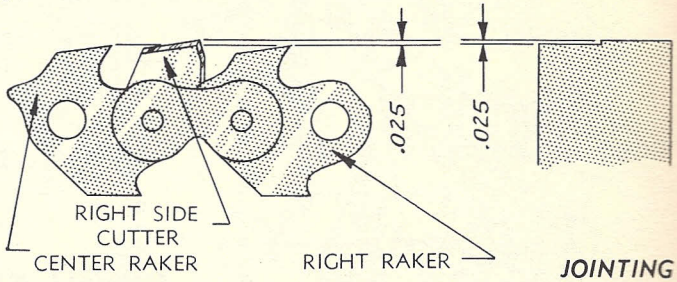

Figure 4A

When filing the rakers, a rat-tail file should be used and the hook angle of 35 degrees maintained. This is shown in Fig. 5A.

JOINTING

The jointing bracket is used to set the jointing height, which is the height between the side cutters and the rakers, as shown in Fig. 4A. This does not need to be done often, unless the chain has been damaged. The side cutters are all the same height and should be set to the higher flat on the jointing bracket, as shown in Fig. 4A. This is done by adjusting the bracket so that the point of the **lowest** cutter is level with the **higher** flat. The points of all the rest of the cutters should then be leveled off to the flat with a file.

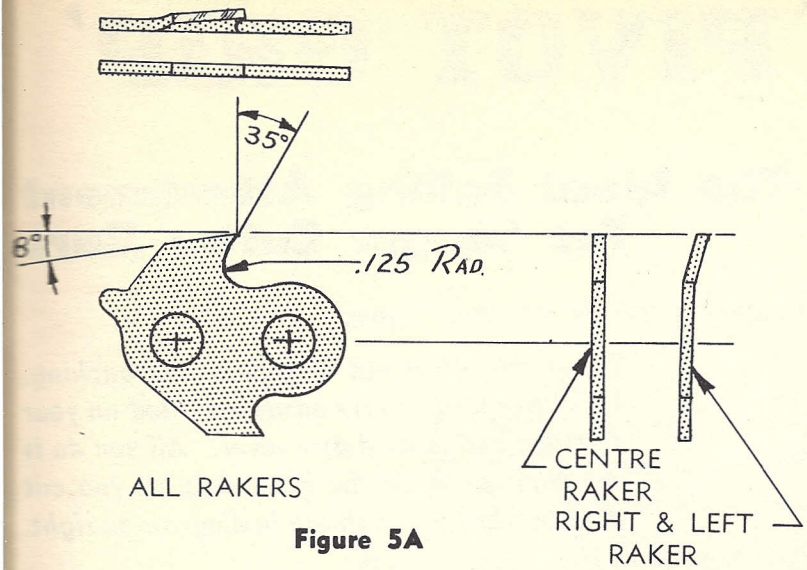

Figure 5A

The lower flat is for setting the height of the rakers, and the points of all these should be leveled off to this flat. The jointing block should not be moved once jointing has been started.

After this operation the back faces of the teeth must be filed to remove the small flat created by the above process, taking care to keep the back angle of 8 degrees approximately correct, as shown in Fig. 5A and 6A. The side cutters slope inwards at a 20-degree angle in addition to the 8-degree back angle, but the rakers are all filed square in this direction. The face angles must also be pointed up as described under sharpening.

SETTING

The set of a chain is the amount that the side cutters are set outwards to give clearance for the chain and the cutter bar in the cut. As the chain leaves the factory there is ample set for all purposes, and if the chain is filed properly without reducing the height of the cutters too much, there will never be any necessity to give additional set. Unless the filer is experienced, the job of setting the chain should be turned over to an expert.

The foregoing instructions are very general in nature in order not to confuse the beginner. As the operator becomes more expert he will develop his own variations from the standard to suit his own particular requirements.

DEVIATIONS FROM STANDARD FILING

The 17-degree back angle on the side cutters has proved to work well in all types of wood, but in some sections, where soft pine and similar wood is cut extensively, better results have been obtained by filing the tooth vertical, leaving the 45-degree bevel unchanged. The rakers, in this instance are left the same.

When hard or frozen woods are being cut, it might be found of advantage to reduce the jointing height slightly.

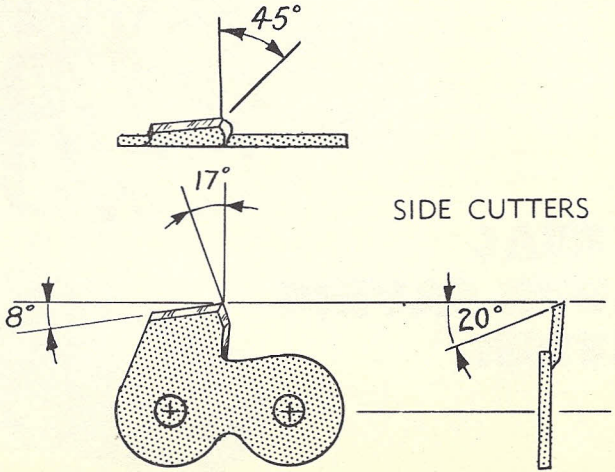

Figure 6A

The PIONEER 'PIVOT GRIP'

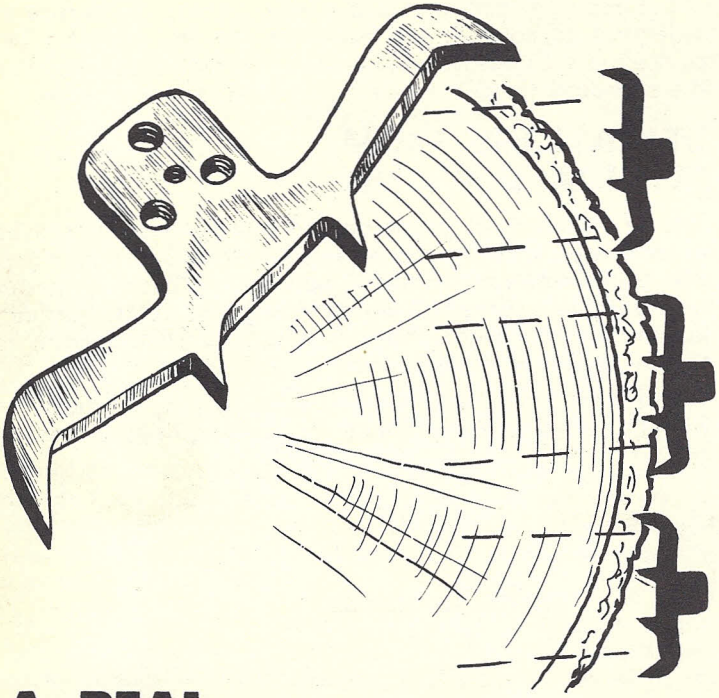

The Ideal Falling Attachment For Longer Cutter Bars

Takes the effort out of felling and bucking. This Pivot Grip is very easily installed on your machine and is used as a lever. All you do is use each point on the Pivot Grip as you cut through the log; as shown in diagram to right.

A REAL LABOR-SAVING DEVICE!

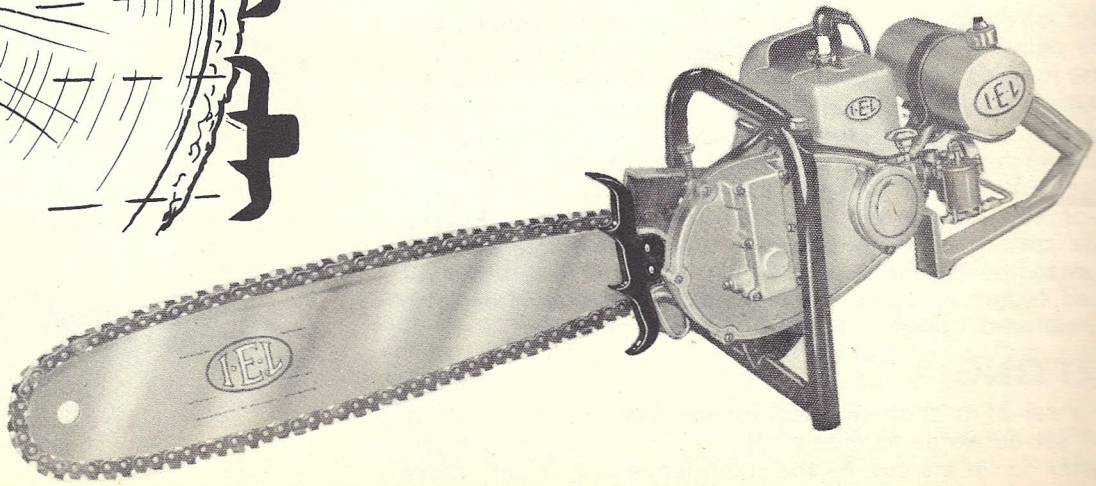

Shown Installed on Machine

Spare parts are stocked as listed on the preceding pages by the dealer in your vicinity.

When ordering Spare Parts, Specify:

(1) Model and serial number of saw.
(2) Part number and description of part in full.
(3) Complete shipping instructions.

COMPLETE AND SPECIFIC INFORMATION ON SPARE PART ORDERS ASSURES THE CUSTOMER OF PROMPT AND EFFICIENT SERVICE

Guarantee—All machines are guaranteed for 30 days against defective parts, provided our recommendations regarding lubrication and general operation are observed.

I·E·L

PIONEER

ONE MAN POWER CHAIN SAW

LITHO'D IN CANADA