Husqvarna

560XP

Spare parts
Ersatzteile
Pièces détachées
Reserve onderdelen
Repuestos
Reservdelar

A 560XP
CHAIN BREAK & CLUTCH COVER

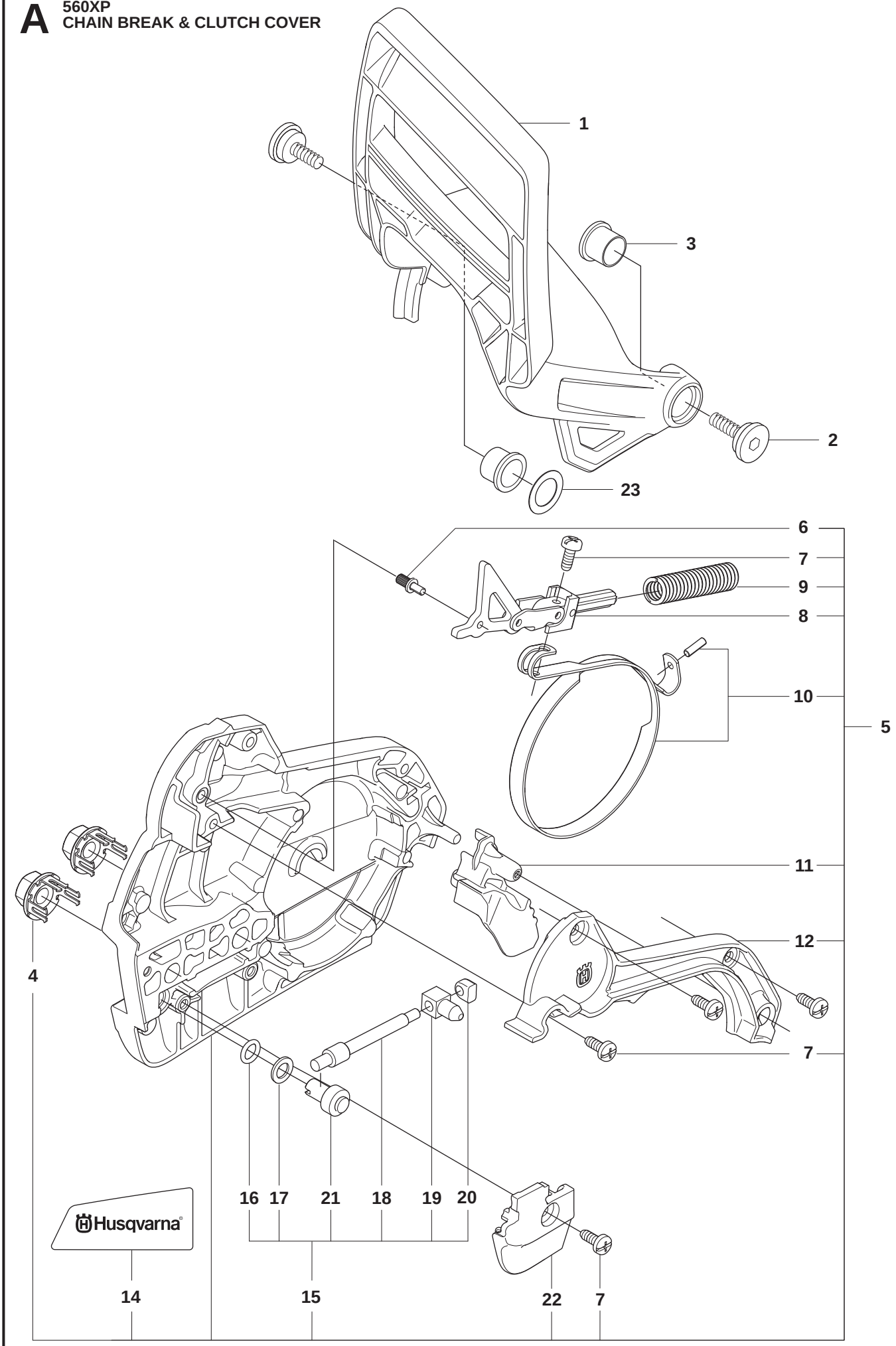

Page A 560 XP CHAIN BRAKE AND CLUTCH COVER

Position	Article	Quantity	Notes	Kit
1	505 20 09-01	1		
2	537 20 90-01	2		
3	537 20 28-01	2		
4	505 19 73-01	2		
5	505 19 90-01	1		
6	503 75 18-01	1		5
7	503 21 70-10	5		5
8	505 19 93-01	1		5
9	503 90 83-01	1		5
10	505 19 95-01	1		5
11	505 20 16-01	1		5
12	505 19 97-01	1		5
14	523 05 80-01	1		5
15	575 26 04-01	1		5
16	740 48 07-02	1		15, 5
17	503 23 00-63	1		15, 5
18	537 28 65-01	1		15, 5
19	537 28 66-01	1		15, 5
20	537 01 74-01	1		15, 5
21	537 07 94-02	1		15, 5
22	505 19 98-01	1		5
23	503 23 00-85	1		

B 560XP
CLUTCH & OIL PUMP

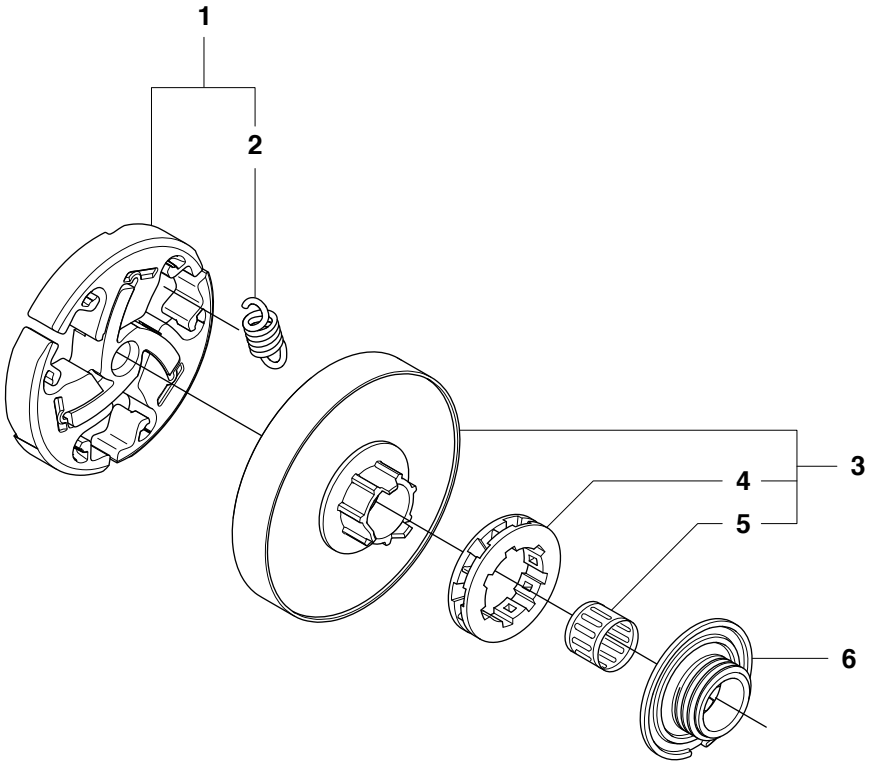

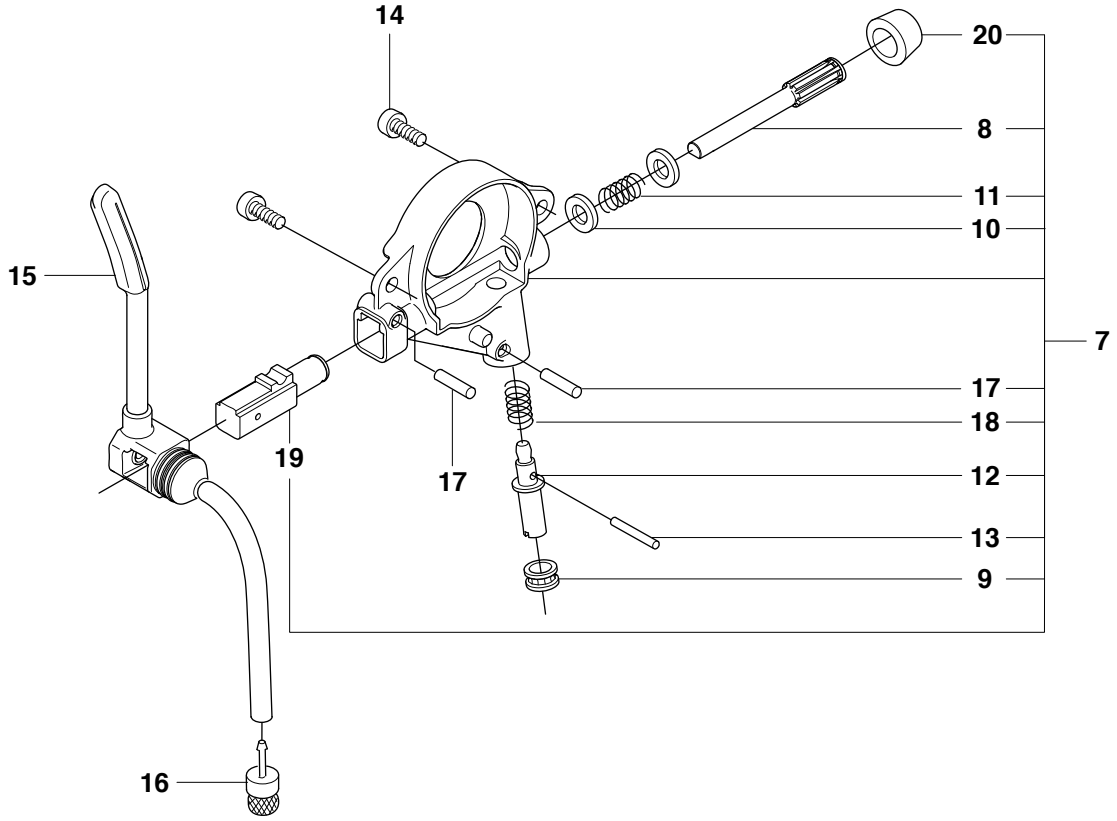

model_enhet_yyyy-mm

Page B 560 XP CLUTCH AND OIL PUMP

Position	Article	Quantity	Notes	Kit
1	574 23 61-01	1		
2	537 16 69-01	3		1
3	575 26 10-01	1	.325"x7	
3	575 26 10-02	1	3/8"x7	
4	501 45 74-02	1	.325"x7	3
4	501 59 80-02	1	3/8"x7	3
5	503 25 34-01	1		3
6	505 20 08-01	1		
7	505 19 99-02	1		
8	505 20 02-02	1		7
9	505 20 03-01	1		7
10	503 23 00-60	2		7
11	503 89 16-01	1		7
12	505 20 14-01	1		7
13	721 11 64-30	1		7
14	510 02 06-01	2		
15	505 20 04-01	1		
16	504 71 00-03	1		
17	720 12 33-00	2		7
18	503 89 15-01	1		7
19	505 20 01-01	1		7
20	503 62 49-02	1		7

C 560XP
CYLINDER COVER

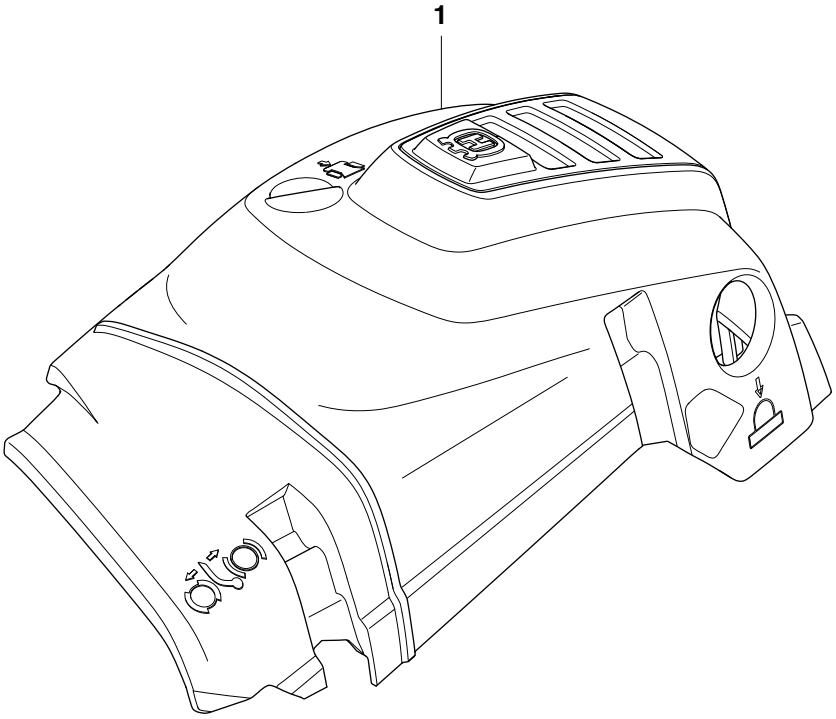

Page C 560XP CYLINDER COVER

Position	Article	Quantity	Notes	Kit
1	510 42 15-01	1		

D 560XP CYLINDER PISTON

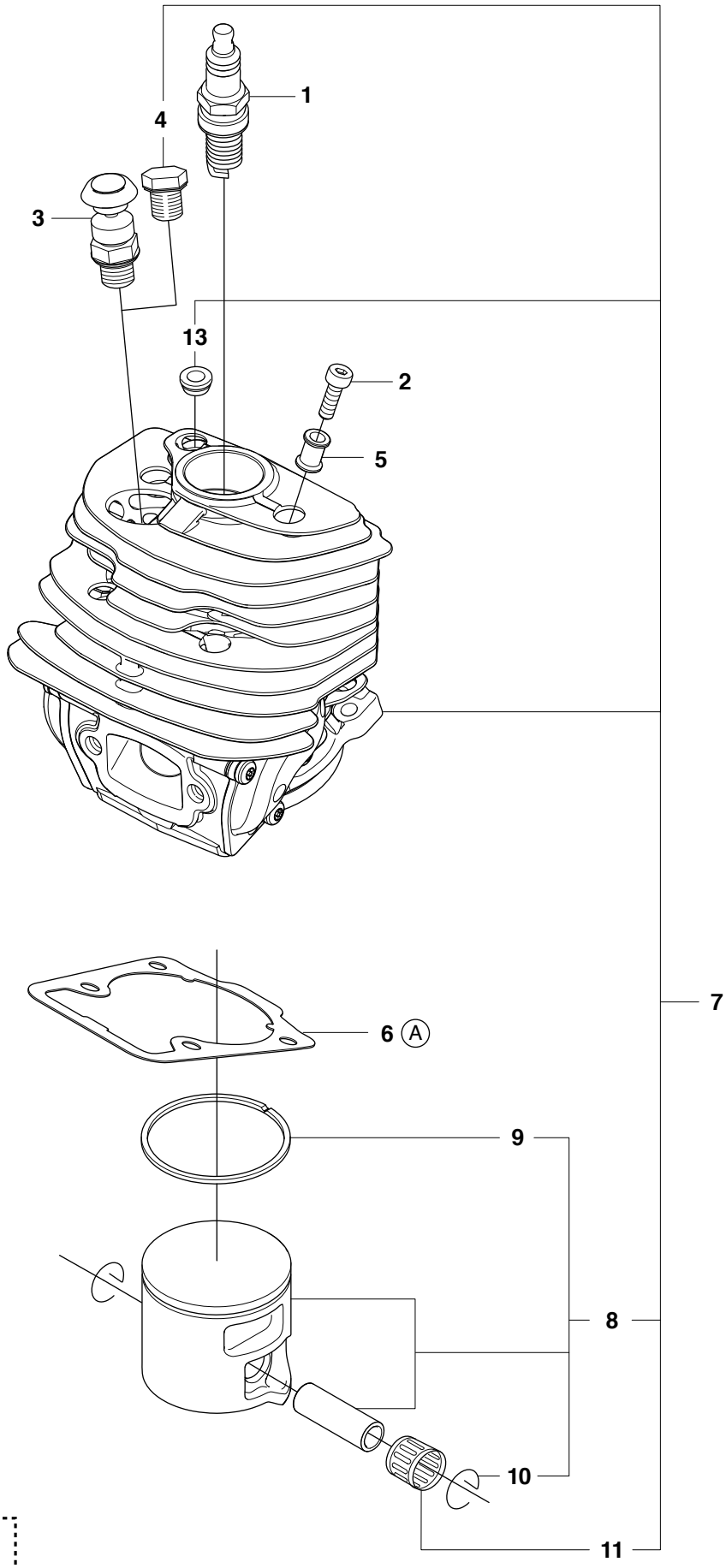

Ⓐ 575 27 00-01
Set of gaskets

Page D 560 XP CYLINDER PISTON

Position	Article	Quantity	Notes	Kit
1	574 51 96-01	1		
2	725 53 37-55	4		
3	575 27 69-01	1		
4	503 55 22-01	1		
5	576 71 76-02	4		
6	510 16 49-01	1		12
7	575 35 58-01	1		
8	505 21 55-02	1		7
9	505 21 57-01	1		8, 7
10	737 44 10-00	2		8, 7
11	503 25 63-01	1		7
12	575 27 00-01	1	A=set of gaskets	
13	520 29 11-01			7

E 560XP CRANKSHAFT

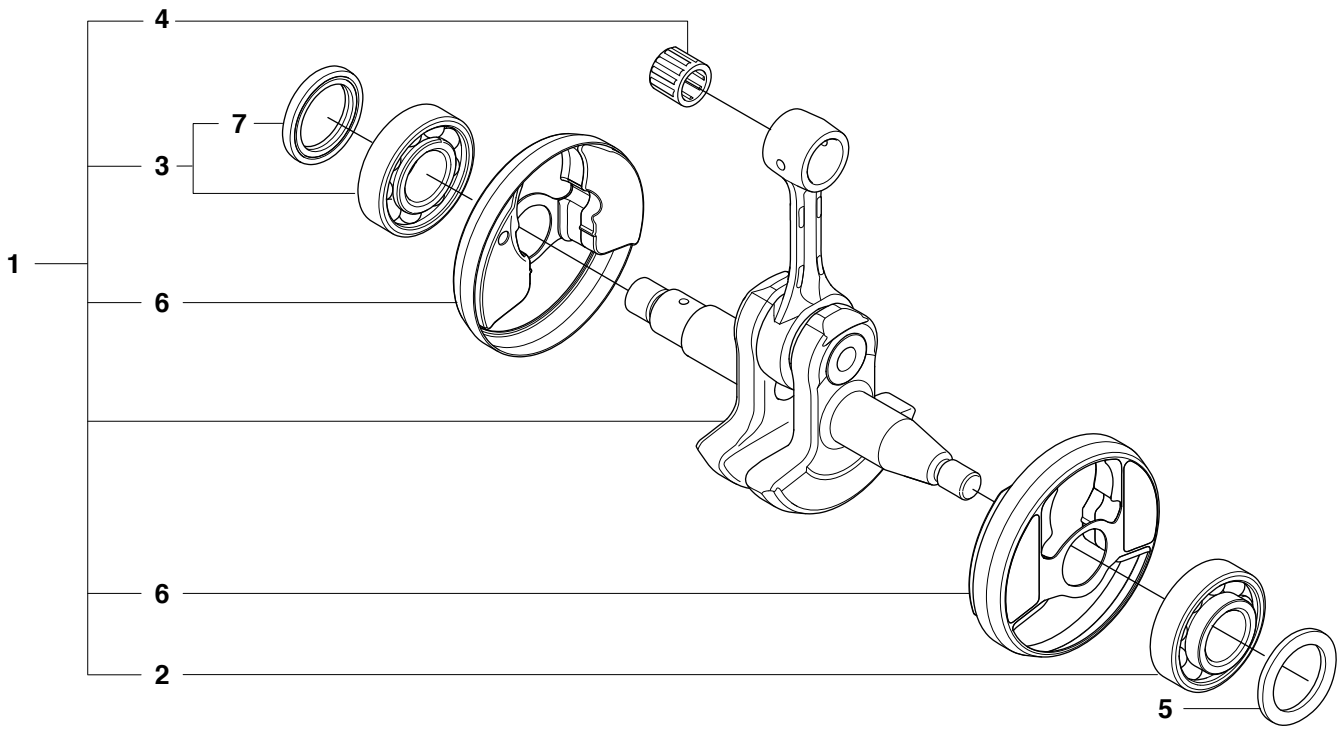

Page E 560 XP CRANKSHAFT

Position	Article	Quantity	Notes	Kit
1	575 54 52-01	1		
2	505 13 35-01	1		1
3	525 43 42-01	1		1
4	503 25 63-01	1		1
5	525 39 12-01	1		1
6	505 13 36-01	2		
7	503 26 09-01	1		3

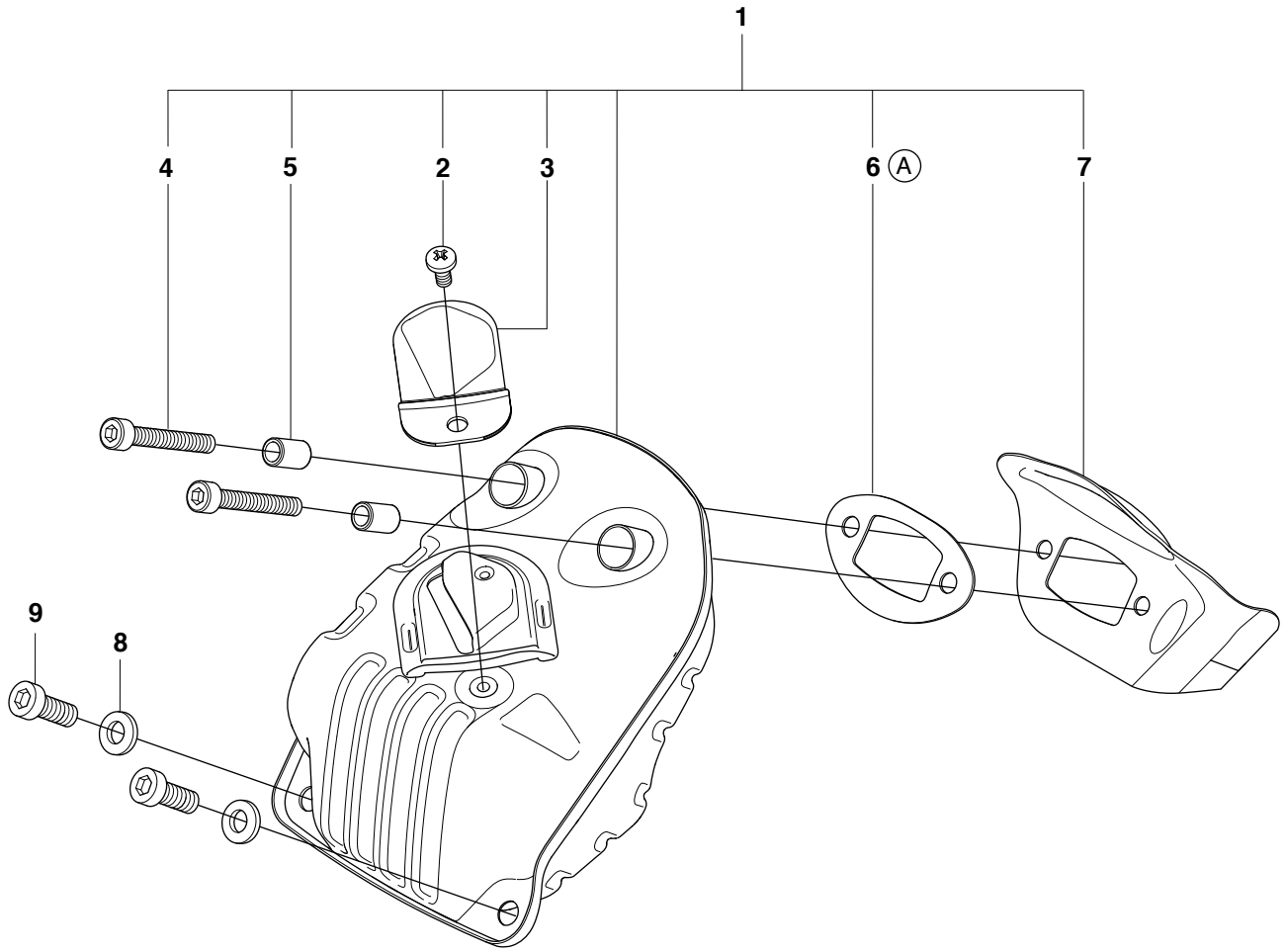

10

Ⓐ 575 27 00-01
Set of gaskets

model_enhet_yyyy-mm

Page F 560 XP MUFFLER

Position	Article	Quantity	Notes	Kit
1	510 00 14-02	1		
2	724 12 87-59	1		1
3	505 17 13-01	1		1
4	725 53 76-55	2		1
5	576 95 52-01	2		1
6	505 17 05-01	1		1, 10
7	505 17 07-01	1		1
8	577 90 22-01	2		
9	503 20 73-20	2		
10	575 27 00-01	1	A=set of gaskets	

G 560XP
CARBURETOR & AIR FILTER

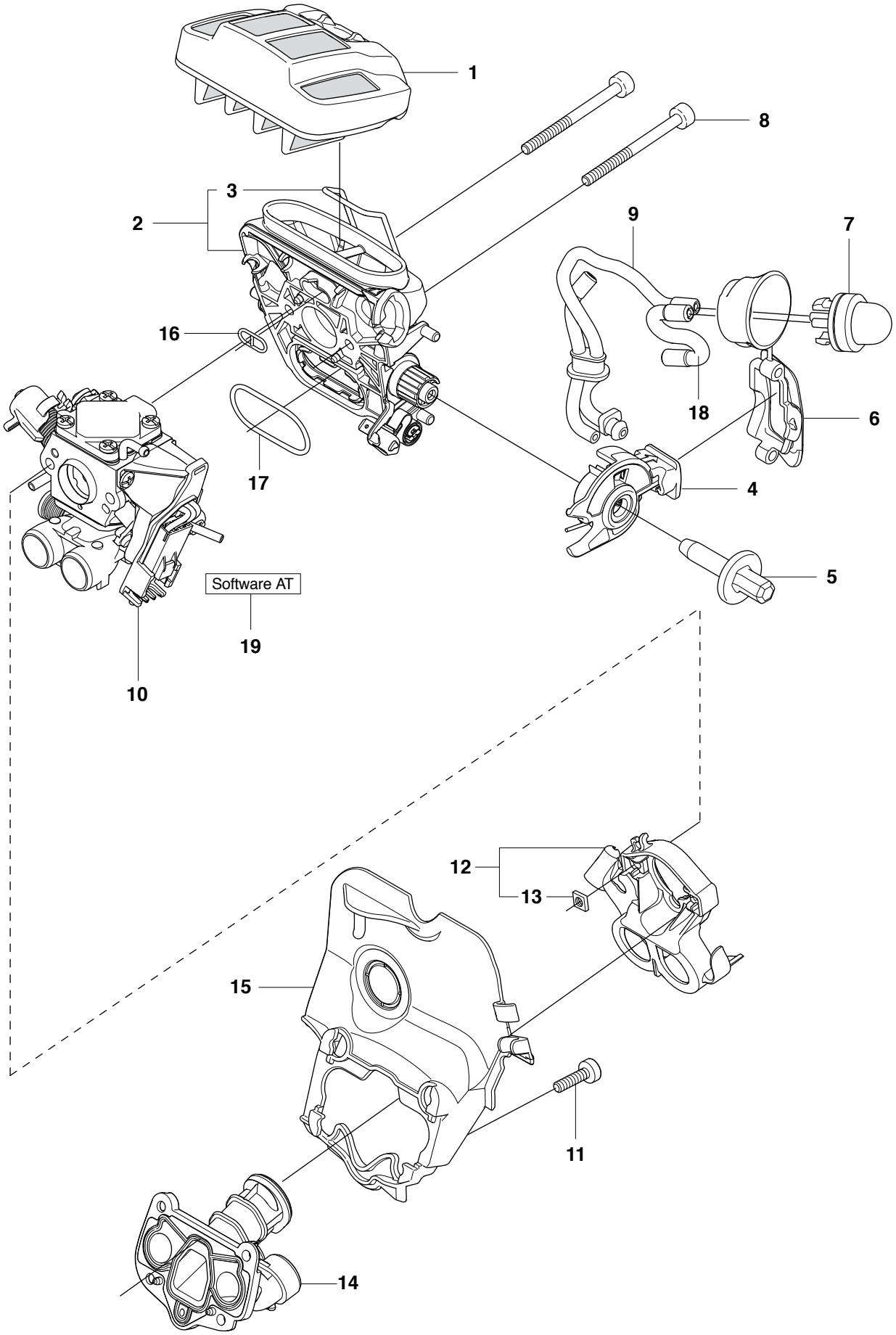

Page G 560 XP CARBURETOR AND AIR FILTER

Position	Article	Quantity	Notes	Kit
1	505 12 63-01	1	NYLON 80 μm black	
1	505 12 63-02	1	NYLON 44 μm yellow	
1	505 12 63-03	1	FELT white	
2	505 12 70-01	1	XP	
2	505 12 70-02	1	XPG	
3	505 17 69-01	1		2
4	510 01 72-01	1		
5	505 15 62-01	1		
6	525 58 81-01	1		
7	503 93 66-01	1		
8	503 20 25-50	2		
9	525 34 43-01	1		
10	522 52 08-01	1		
11	510 02 06-01	4		
12	505 16 52-01	1		
13	503 22 65-03	2		12
14	520 29 10-01	1		
15	520 29 09-01	1		
16	525 61 92-01	1		
17	525 61 90-01	1		
18	523 05 68-01	1		
19		1	Download from your local supportsite	

H 560XP CRANKCASE

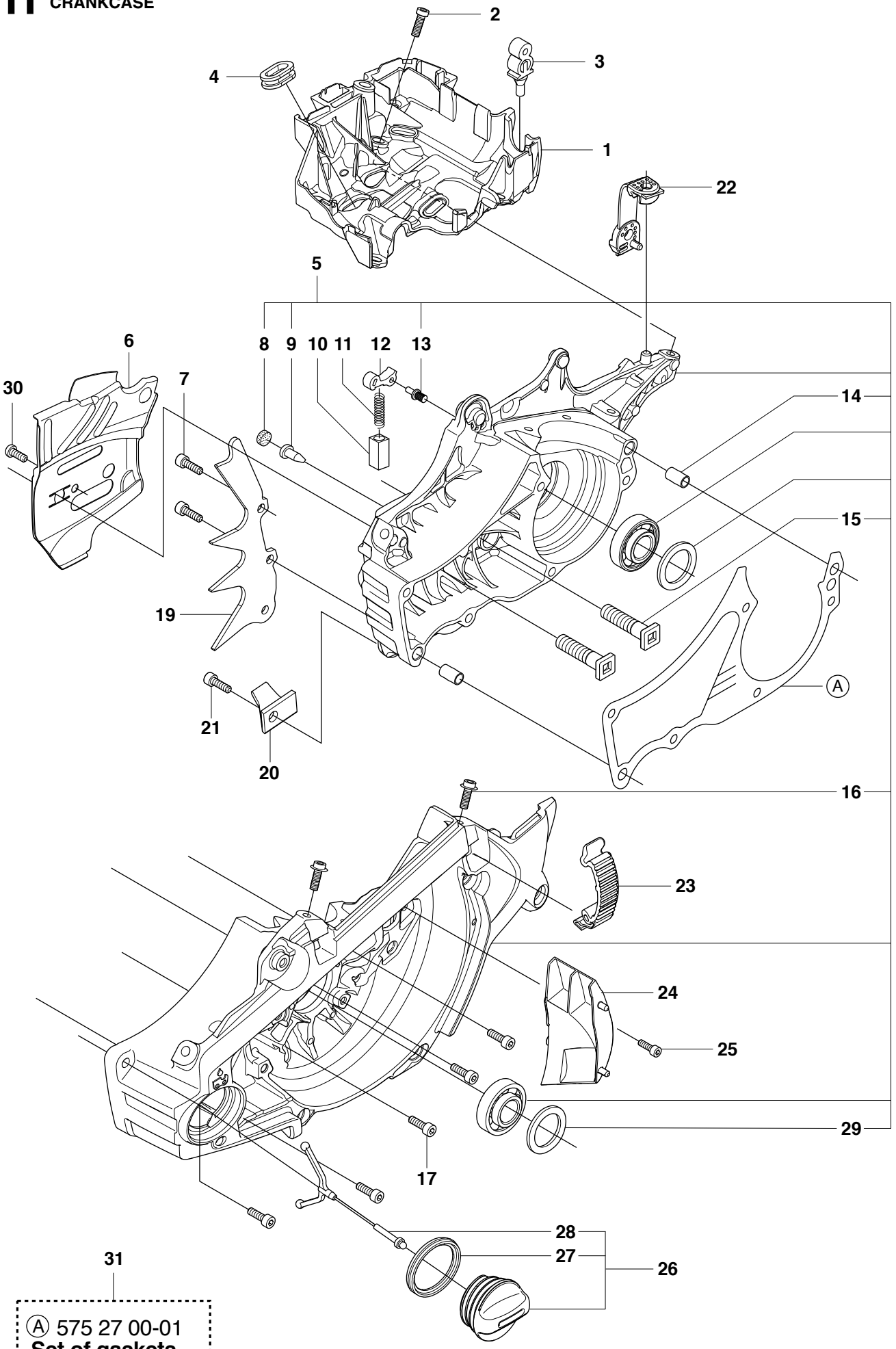

Ⓐ 575 27 00-01
Set of gaskets

Page H 560 XP CRANKCASE

Position	Article	Quantity	Notes	Kit
1	505 15 86-01	1		
2	503 20 02-16	4		
3	503 86 93-01	2		
4	537 08 83-01	1		
5	575 38 02-01	1		
6	505 20 11-01	1		
7	725 53 29-55	2		
8	537 40 35-01	1		5
9	530 02 61-19	1		5
10	537 21 07-01	1		
11	503 43 65-01	1		
12	505 20 12-01	1		
13	503 75 18-01	1		5
14	501 27 08-01	2		5
15	505 21 73-01	2		5
16	505 11 15-01	2		5
17	503 20 08-02	5		
19	577 93 52-01	1		
20	537 37 79-02	1		
21	503 21 88-76	1		
22	505 12 58-01	1		
23	503 89 47-03	3		
24	520 29 12-01	1		
25	510 02 06-01	1		
26	537 21 52-02	1		
27	537 21 50-01	1		26
28	503 57 89-01	1		26
29	525 39 12-01	1		5
30	503 21 28-13	1		
31	575 27 00-01	1	A=set of gaskets	

J 560XP FUEL TANK

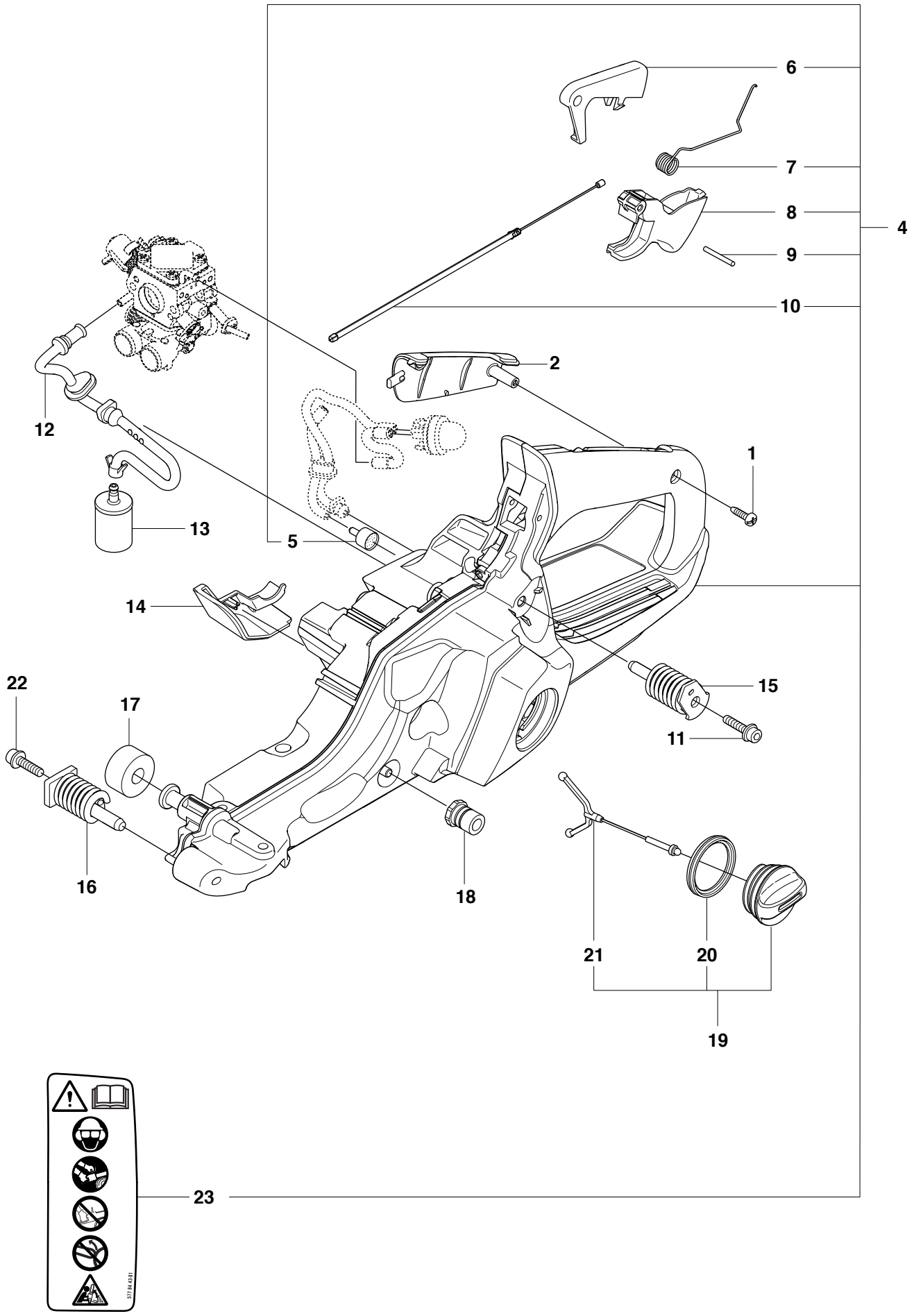

model: enhet: yyyy-mm

Page J 560 XP FUEL TANK

Position	Article	Quantity	Notes	Kit
1	503 21 28-13	1		
2	504 10 63-01	1		
4	575 38 22-01	1		
5	537 35 95-01	1		4
6	544 09 98-01	1		4
7	544 09 99-01	1		4
8	505 15 77-01	1		4
9	720 18 25-20	1		4
10	521 88 79-01	1		4
11	503 21 88-74	1		
12	573 99 35-01	1		
13	503 44 32-01	1		
14	505 16 59-01	1		
15	505 12 90-01	1		
16	505 12 87-01	1		
17	523 08 55-01	1		
18	501 00 76-01	1		
19	537 21 52-02	1		
20	537 21 50-01	1		19
21	503 57 89-01	1		19
22	503 21 88-76	1		
23	577 84 43-01	1		4

K1 560XP HANDLES

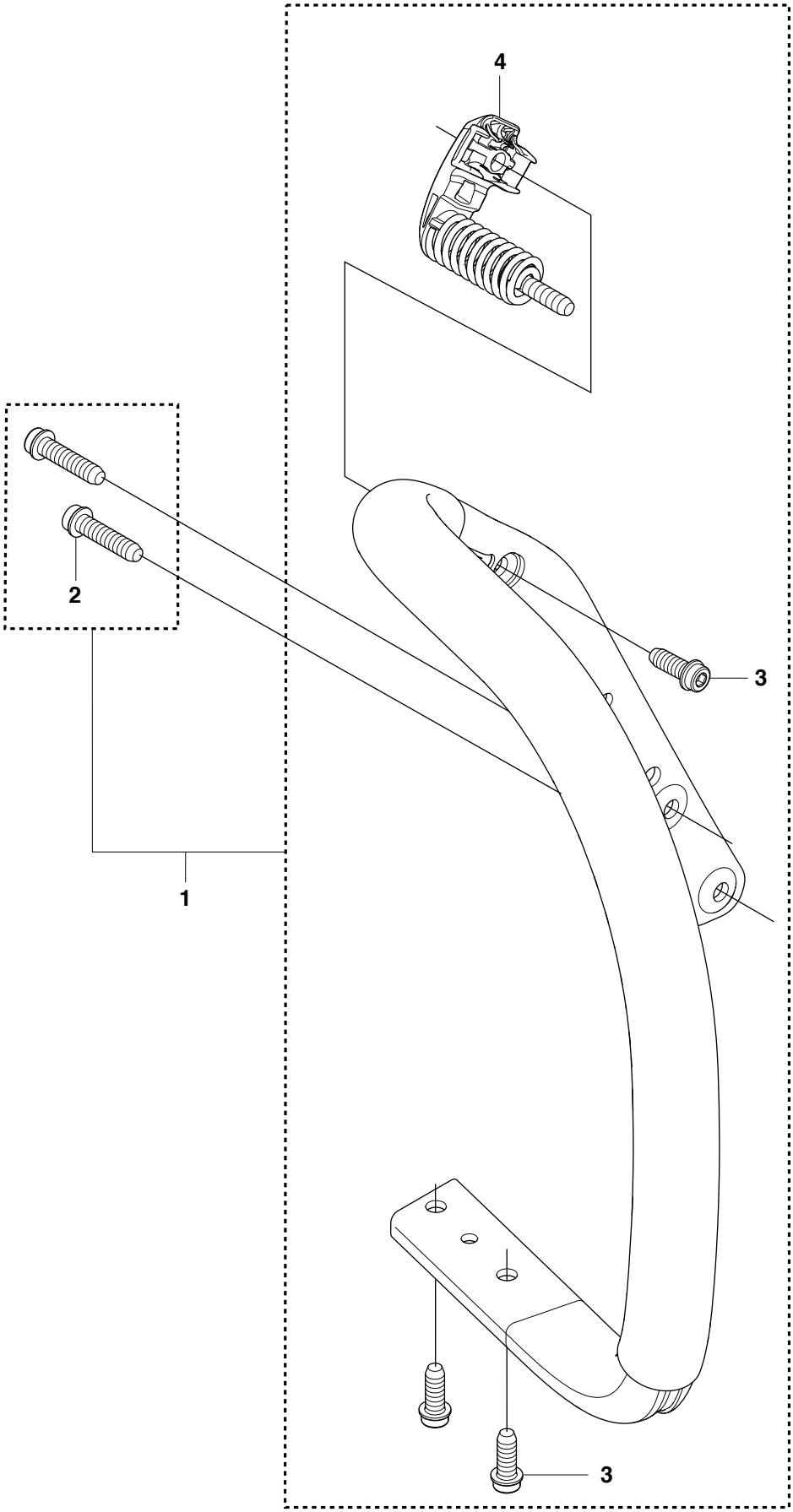

Page K1 560 XP HANDLE

Position	Article	Quantity	Notes	Kit
1	575 38 89-01	1		
2	503 21 88-76	2		1
3	503 21 88-72	4		1
4	505 12 97-01	1		1

K2 560XPG HEATED HANDLES

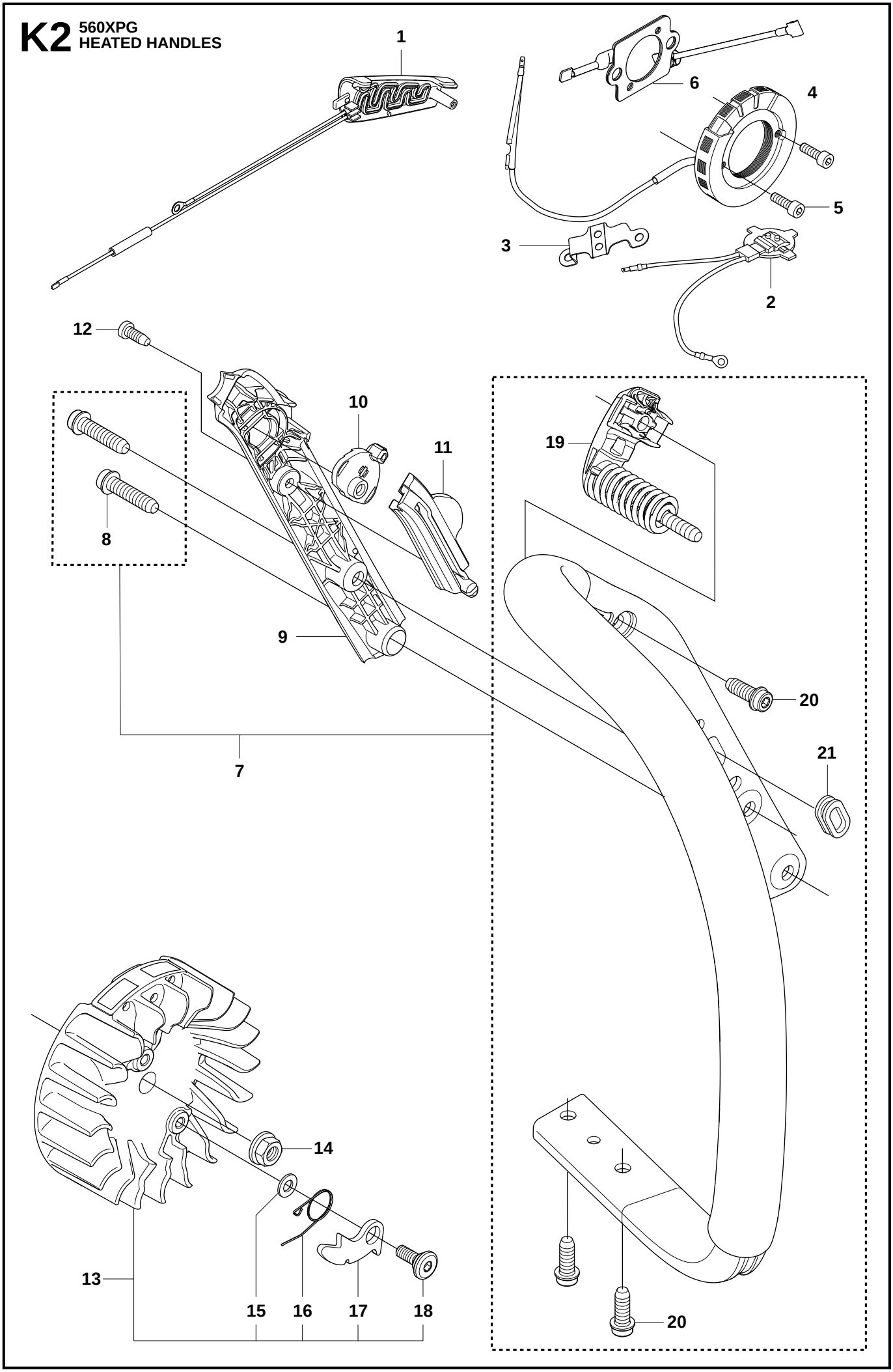

Page K2 560 XPG HEATED HANDLES

Position	Article	Quantity	Notes	Kit
1	522 74 19-01	1		
2	522 66 58-01	1		
3	537 21 08-01	1		
4	522 61 14-01	1		
5	544 44 43-01	2		
6	522 63 01-01	1		
7	575 38 89-02	1		
8	503 21 88-76	2		7
9	505 15 74-01	1		
10	537 25 25-01	1		
11	510 09 78-01	1		
12	503 21 28-13	1		
13	504 87 24-02	1		
14	503 22 04-01	1		
15	503 23 00-42	2		13
16	501 67 35-01	2		13
17	501 67 32-01	2		13
18	501 81 99-01	2		13
19	505 12 97-01	1		7
20	503 21 88-72	4		7
21	537 08 83-01	1		7

L 560XP IGNITION SYSTEM

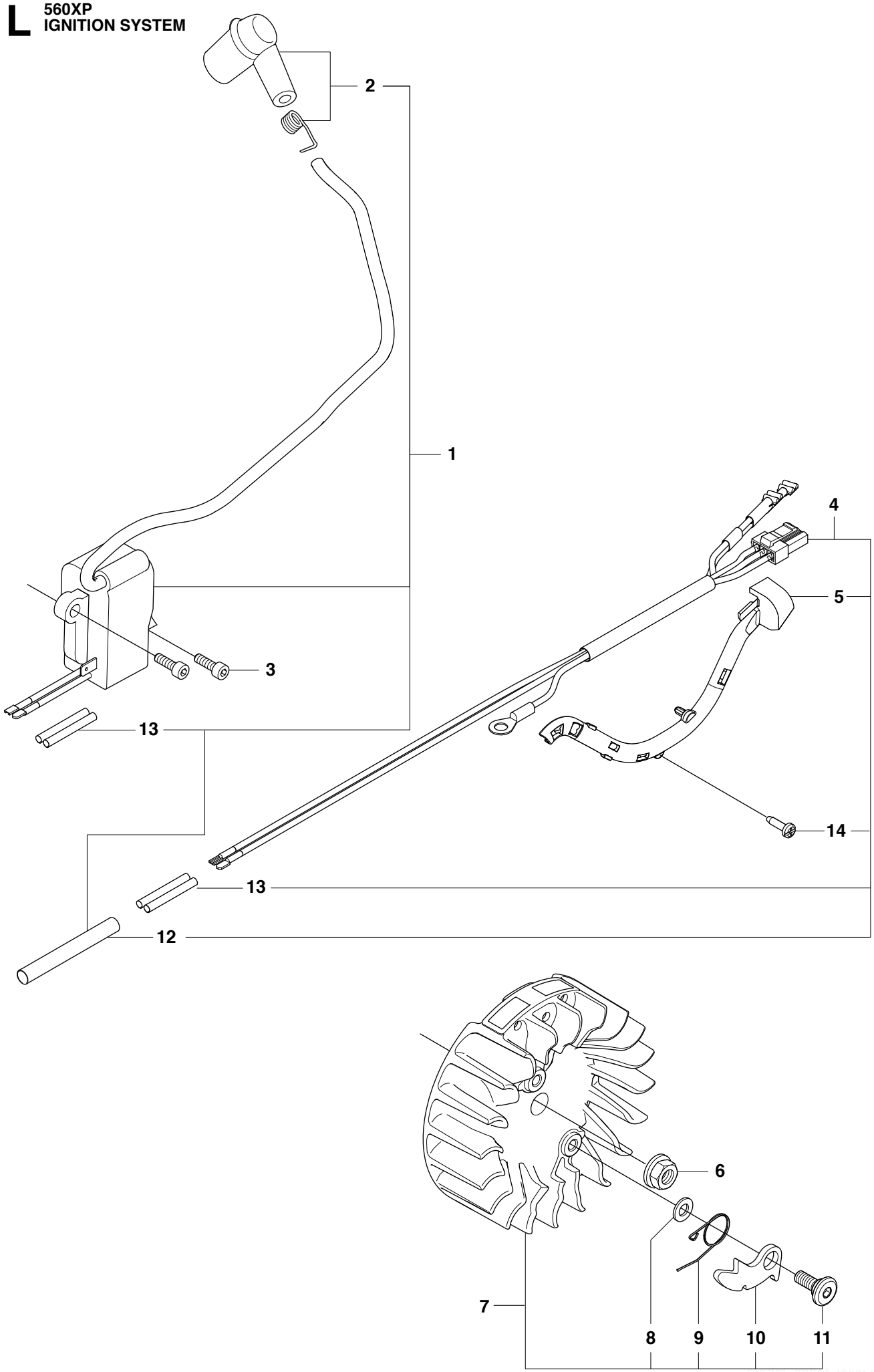

Page L 560 XP IGNITION SYSTEM

Position	Article	Quantity	Notes	Kit
1	575 42 84-01	1		
2	501 48 54-04	1		1
3	503 20 02-20	2		1
4	575 43 06-01	1		
5	505 17 82-01	1		4
6	503 22 04-01	1		
7	504 87 24-01	1		
8	503 23 00-42	2		
9	501 67 35-01	2		
10	501 67 32-01	2		
11	501 81 99-01	2		
12	504 04 35-05	1		1,4
13	503 23 85-01	2		4
14	503 21 28-13	1		4

M 560XP STARTER

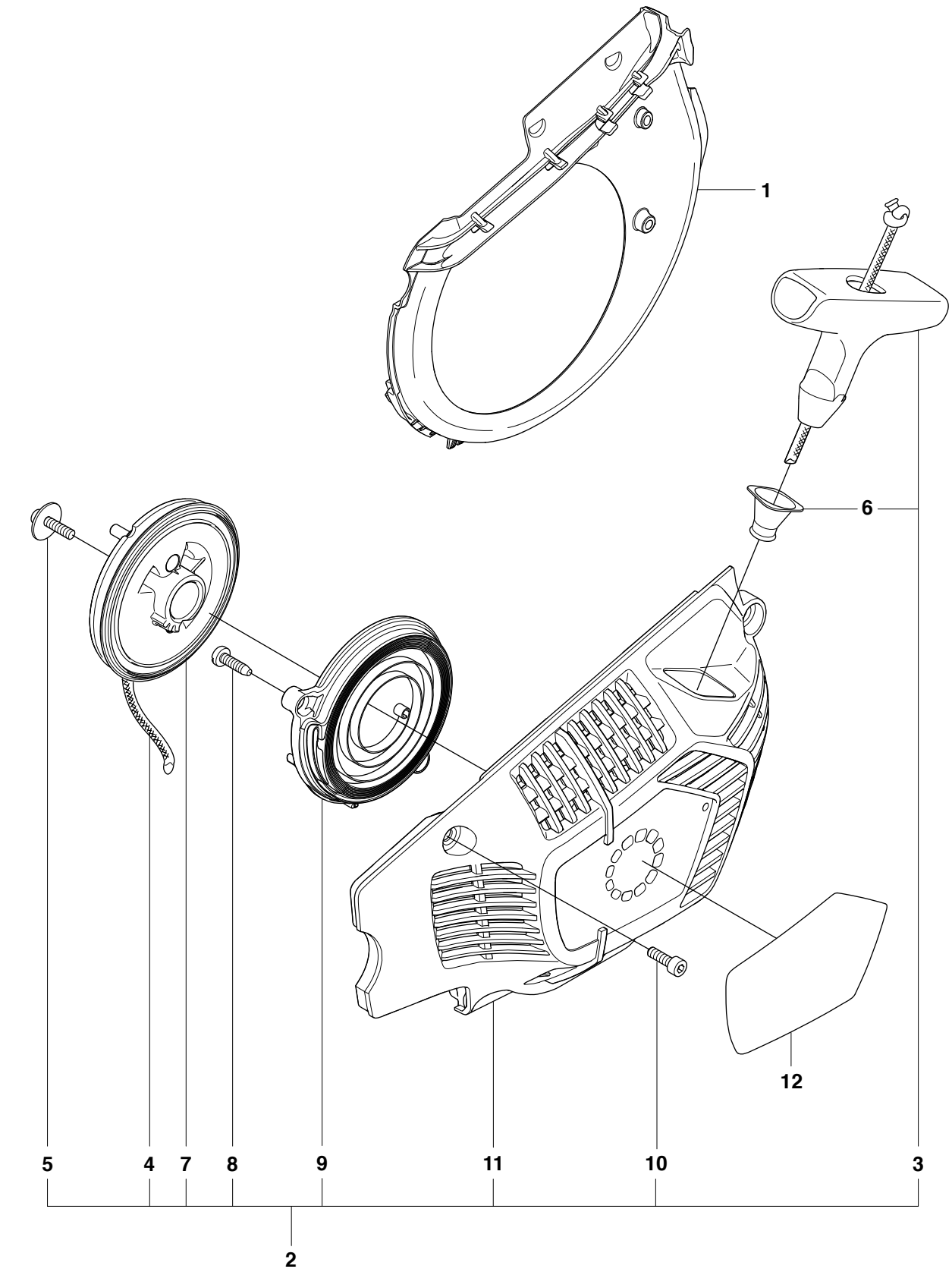

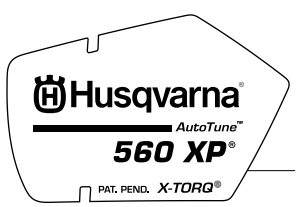

12

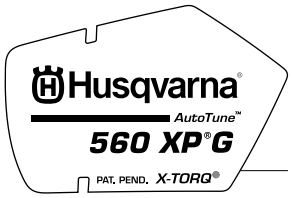

12

Page M 560 XP STARTER

Position	Article	Quantity	Notes	Kit
1	505 15 75-01	1		
2	505 15 92-02	1		
3	537 23 25-01	1		2
4	505 30 51-25	1		2
5	503 20 52-16	1		2
6	537 28 32-01	1		2
7	505 15 81-01	1		2
8	503 21 28-13	2		2
9	505 15 79-01	1		2
10	544 08 03-01	4		2
11	505 15 91-01	1		2
12	523 03 56-03	1	XP	
12	523 03 56-04	1	XPG	

N 560XP
CARBURETOR DETAILS

ZAMA C1M-EL44

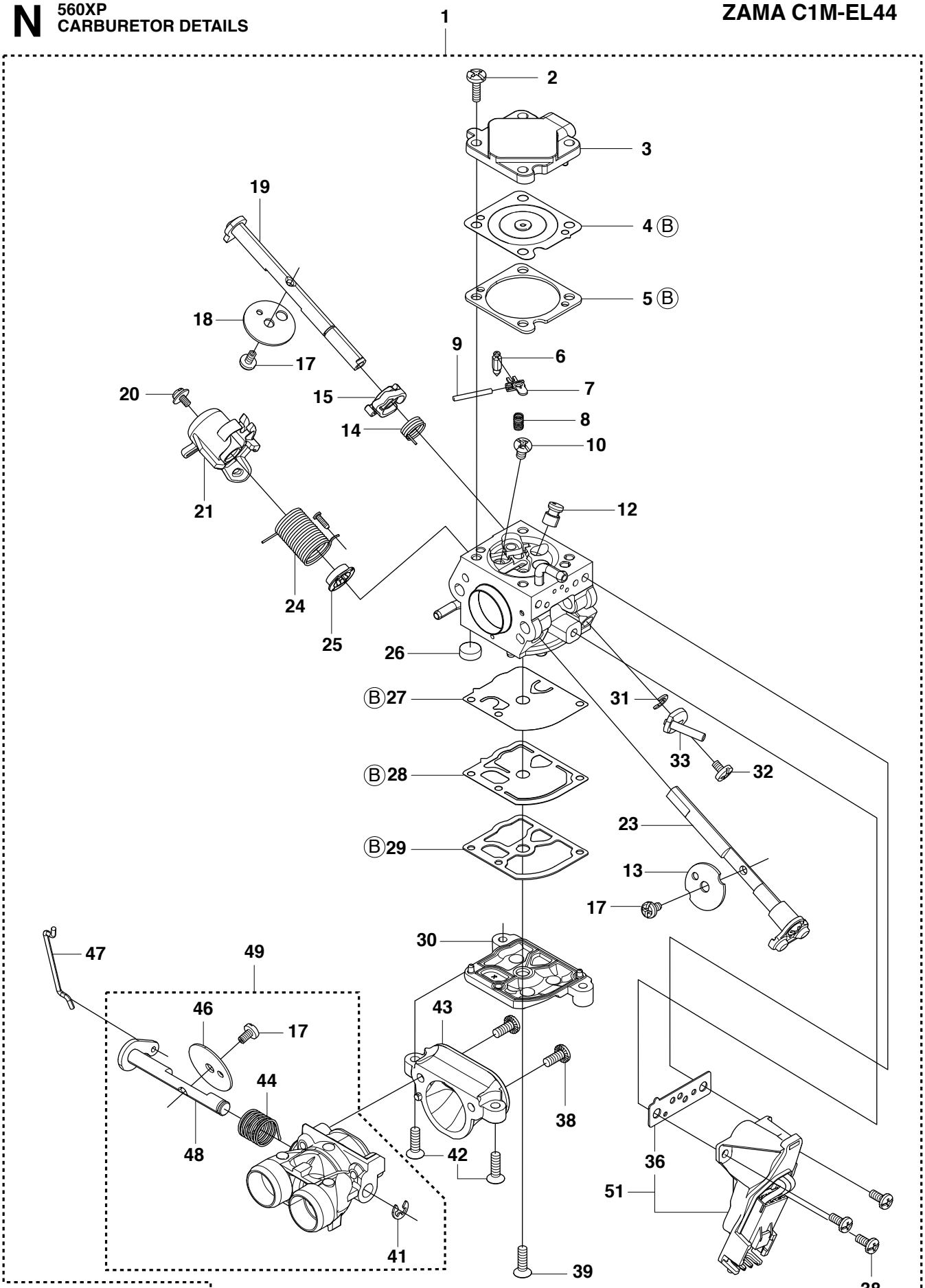

B 522 51 89-01
Set of gaskets

Page N 560 XP CARBURETOR DETAILS

Position	Article	Quantity	Notes	Kit
1	522 52 08-01	1		
2	522 54 51 01	4		1
3	522 51 72 01	1		1
4	522 51 74 01	1		1, 50
5	522 51 75 01	1		1, 50
6	503 47 97-01	1		1
7	503 66 59-01	1		1
8	537 38 34-01	1		1
9	503 48 00-01	1		1
10	503 48 01-01	1		1
12	576 41 42-01	1		1
13	523 07 72-01	1		1
14	522 51 87-01	1		1
15	522 51 77-01	1		1
17	503 48 18-01	3		1
18	504 62 77-01	1		1
19	522 51 83-01	1		1
20	502 07 84-01	1		1
21	522 51 78-01	1		1
23	522 51 85-01	1		1
24	502 07 87-01	1		1
25	502 07 98-01	1		1
26	503 53 57-01	1		1
27	537 38 31-01	1		1, 50
28	537 40 33-01	1		1, 50
29	537 02 01-01	1		1, 50
30	575 54 43-01	1		1
31	504 02 67-01	1		1
32	503 47 90-01	1		1
33	522 51 76-01	1		1
36	510 41 33-01	1		1, 51
38	506 39 66-01	5		1
39	522 51 81-01	1		1
41	537 38 52-01	1		1
42	522 51 80-01	2		1
43	575 54 44-01	1		1
44	522 51 86-01	1		1
46	537 17 70-01	1		1
47	522 51 79-01	1		1
48	522 51 82-01	1		1
49	578 22 78-01	1		1
50	522 51 89-01	1	B=set of gaskets	
51	575 38 00-01	1		1

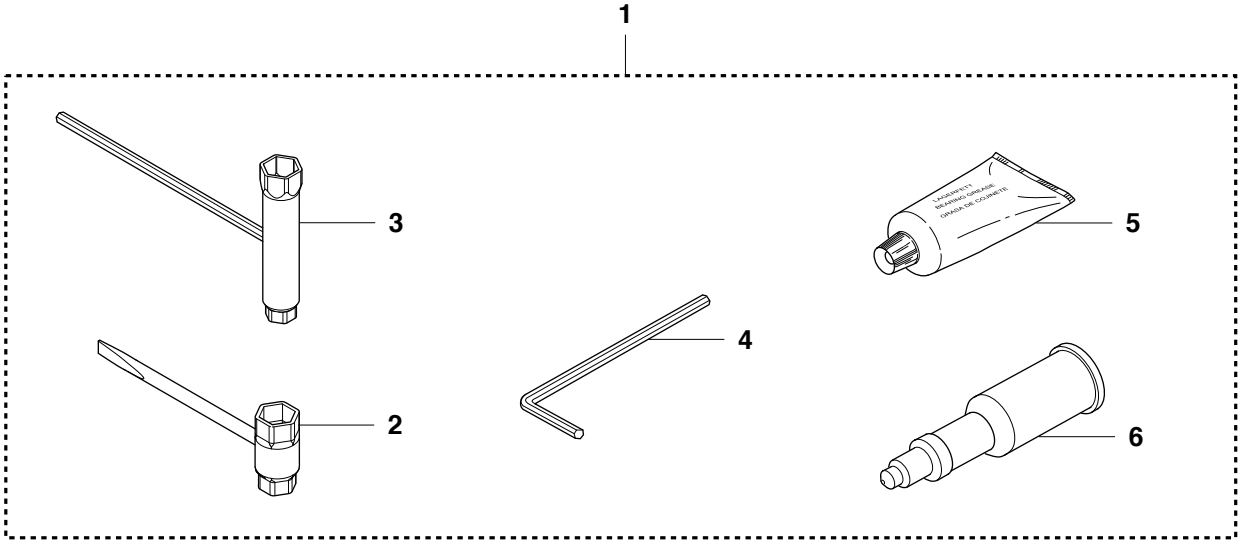

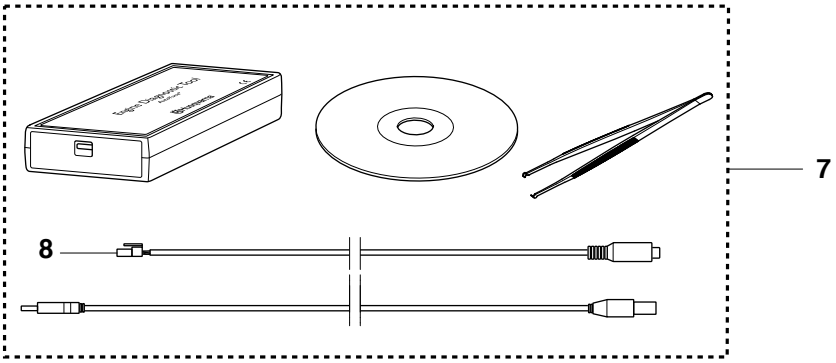

WINTER KIT 560XP

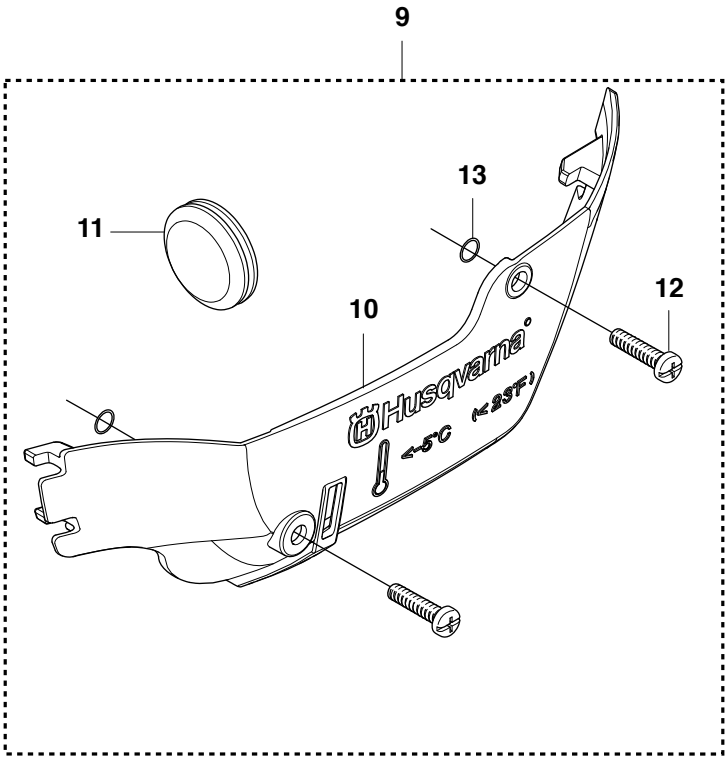

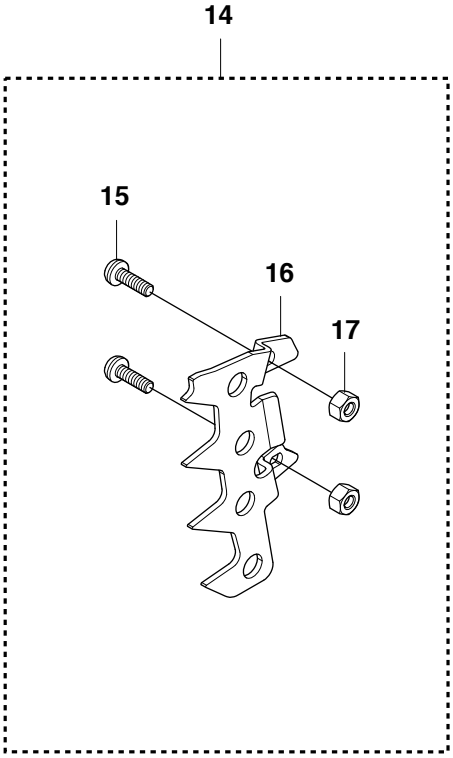

Page P 560 XP ACCESSORIES

Position	Article	Quantity	Notes	Kit
1	575 43 92-01	1		
2	522 52 11-01	1		1
3	503 55 86-01	1		1
4	503 55 86-02	1		1
5	503 62 12-01	1		1
6	501 91 14-01	1		1
7	576 69 23-01	1	Engine diagnostic tool	
8	576 18 34-01	1	Diagnostics cable	7
9	522 98 65-01	1		
10	505 16 61-01	1		9
11	503 40 59-01	1		9
12	503 21 70-16	2		9
13	740 42 01-00	2		9
14	577 01 40-01	1		
15	503 21 26-16	2		14
16	577 96 25-01	1		14
17	503 22 24-01	2		14