Husqvarna®

SPARE PARTS LIST

CHAIN SAWS

435 II

P 435 II, 435e II
ACCESSORIES

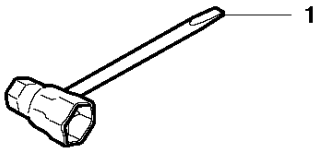

Ref	Part no.	Description	Remark	Qty	Kit
1	503 55 85-04	TOOL		1	

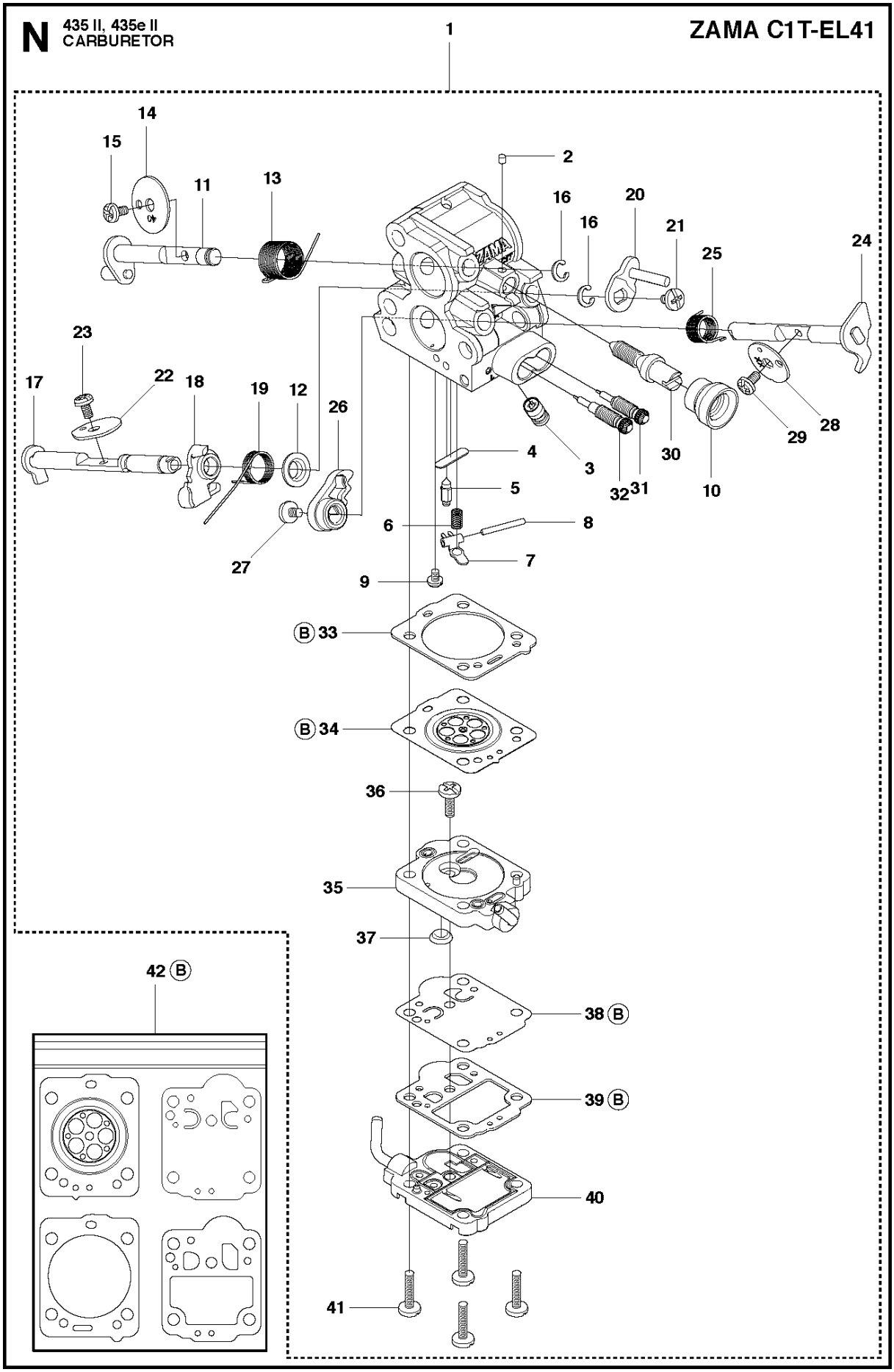
N
435 II, 435e II
CARBURETOR
ZAMA C1T-EL41
1
2
3
4
5
6
7
8
9
10
11
12
13
14
15
16
16
17
18
19
20
21
22
23
24
25
26
27
28
29
30
31
32
B 33
B 34
35
36
37
38 B
39 B
40
41
42 B

Ref	Part no.	Description	Remark	Qty	Kit
1	506 45 05-01	CARBURETTOR	Zama C1T-EL41	1	
2	503 48 11-01	PIECE		1	1
3	504 02 40-01	NOZZLE ASSY		1	1
4	503 53 56-01	PLUG WELCH		1	1
5	503 47 97-01	VALVE		1	1
6	537 02 03-01	SPRING		1	1
7	503 66 59-01	LEVER		1	1
8	503 48 00-01	PIN RETAINING SCREW		1	1
9	504 02 41-01	SCREW		1	1
10	505 53 52-01	CAP		1	1
11	504 02 61-01	SHAFT ASSY		1	1
12	505 11 07-01	COLLAR		1	1
13	504 02 85-01	SPRING		1	1
14	504 02 75-01	VALVE		1	1
15	503 48 18-01	SCREW		2	1
16	504 02 67-01	CIRCLIP		2	1
17	504 02 62-01	SHAFT ASSY		1	1
18	540 05 37-01	LEVER		1	1
19	504 02 83-01	SPRING		1	1
20	504 02 63-01	LEVER		1	1
21	503 47 90-01	SCREW		2	1
22	504 02 74-01	VALVE		1	1
23	503 48 18-01	SCREW		2	1
24	504 02 60-01	SHAFT ASSY		1	1
25	504 02 84-01	SPRING		1	1
26	544 98 31-01	LEVER		1	1
27	503 47 90-01	SCREW		2	1
28	504 02 76-01	VALVE		1	1
29	503 47 92-01	SCREW		1	1
30	504 02 73-01	SCREW		1	1
31	504 90 92-01	SCREW		1	1
32	504 02 81-01	SCREW		1	1
33	504 02 43-01	GASKET		1	1, 42
34	504 02 45-01	DIAPHRAGM		1	1, 42
35	504 02 46-01	BODY		1	1
36	504 02 82-01	SCREW		1	1
37	504 02 50-01	STRAINER		1	1
38	504 02 56-01	DIAPHRAGM		1	1, 42
39	504 02 57-01	GASKET		1	1, 42
40	504 02 59-01	COVER		1	1
41	504 02 78-01	SCREW		4	1
42	504 02 86-01	GASKET KIT		1	

G 435 II, 435e II
CARBURETOR & AIR FILTER

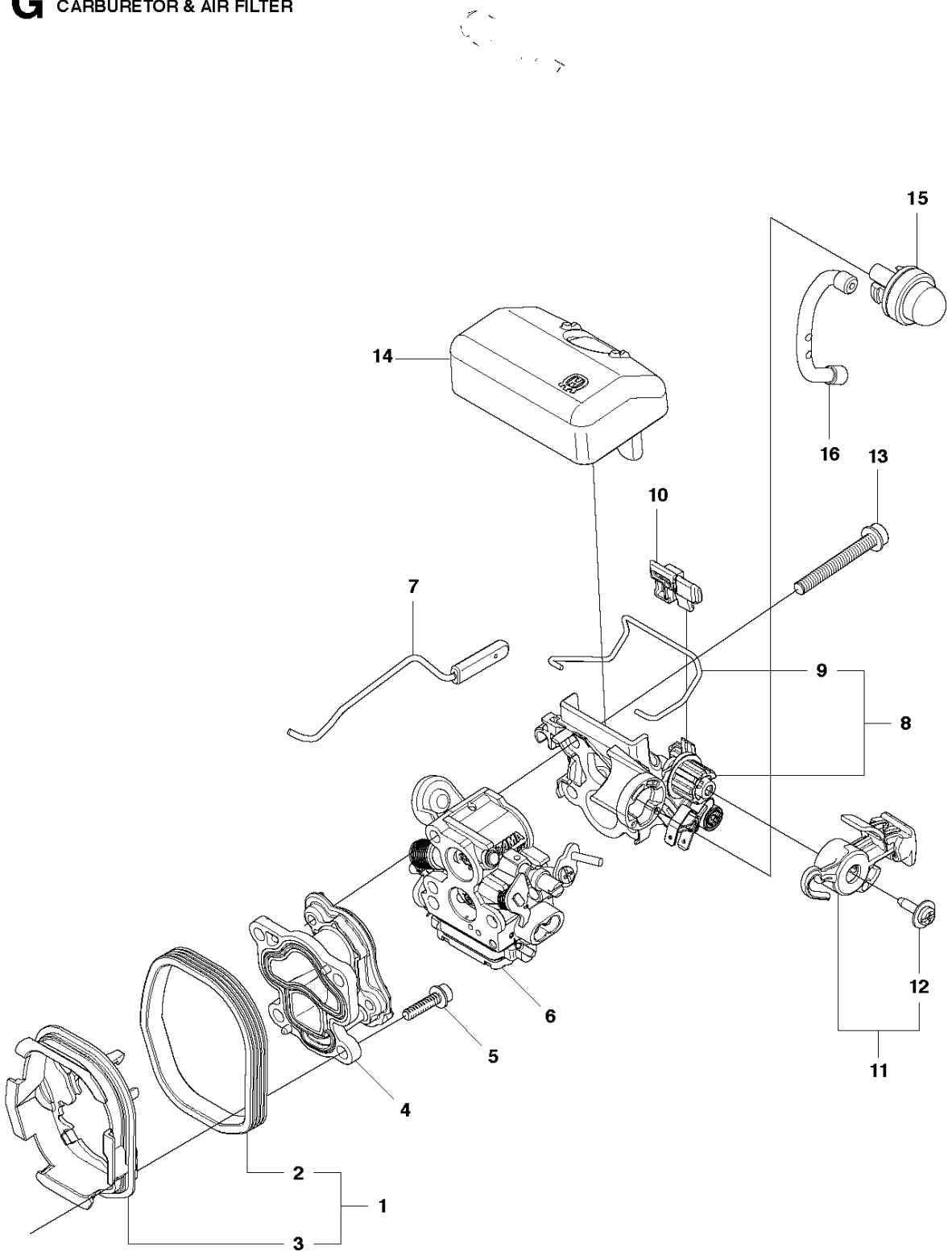

Ref	Part no.	Description	Remark	Qty	Kit
1	504 72 47-01	INSULATION WALL		1	
2	504 72 45-01	INSULATION WALL		1	1
3	504 72 44-01	INSULATION WALL		1	1
4	504 20 12-01	INLET PIPE		1	
5	503 20 02-16	SCREW IHSCFM		4	
6	506 45 05-01	CARBURETTOR		1	
7	544 28 44-01	THROTTLE ROD ASSY		1	
8	544 97 64-01	FILTER HOLDER		1	
9	544 39 26-01	SHACKLE		1	8
10	504 71 25-01	GUIDE		1	
11	544 84 43-02	CONTROL		1	
12	544 97 66-01	SCREW		1	11
13	503 20 02-40	SCREW IHSCFM		3	
14	544 80 54-02	AIR FILTER		1	
14	544 80 54-03	AIR FILTER		1	
15	503 93 66-01	PRIMER HOUSING		1	
16	544 40 19-01	HOSE		1	

A2 435 II
CHAIN BREAK & CLUTCH COVER

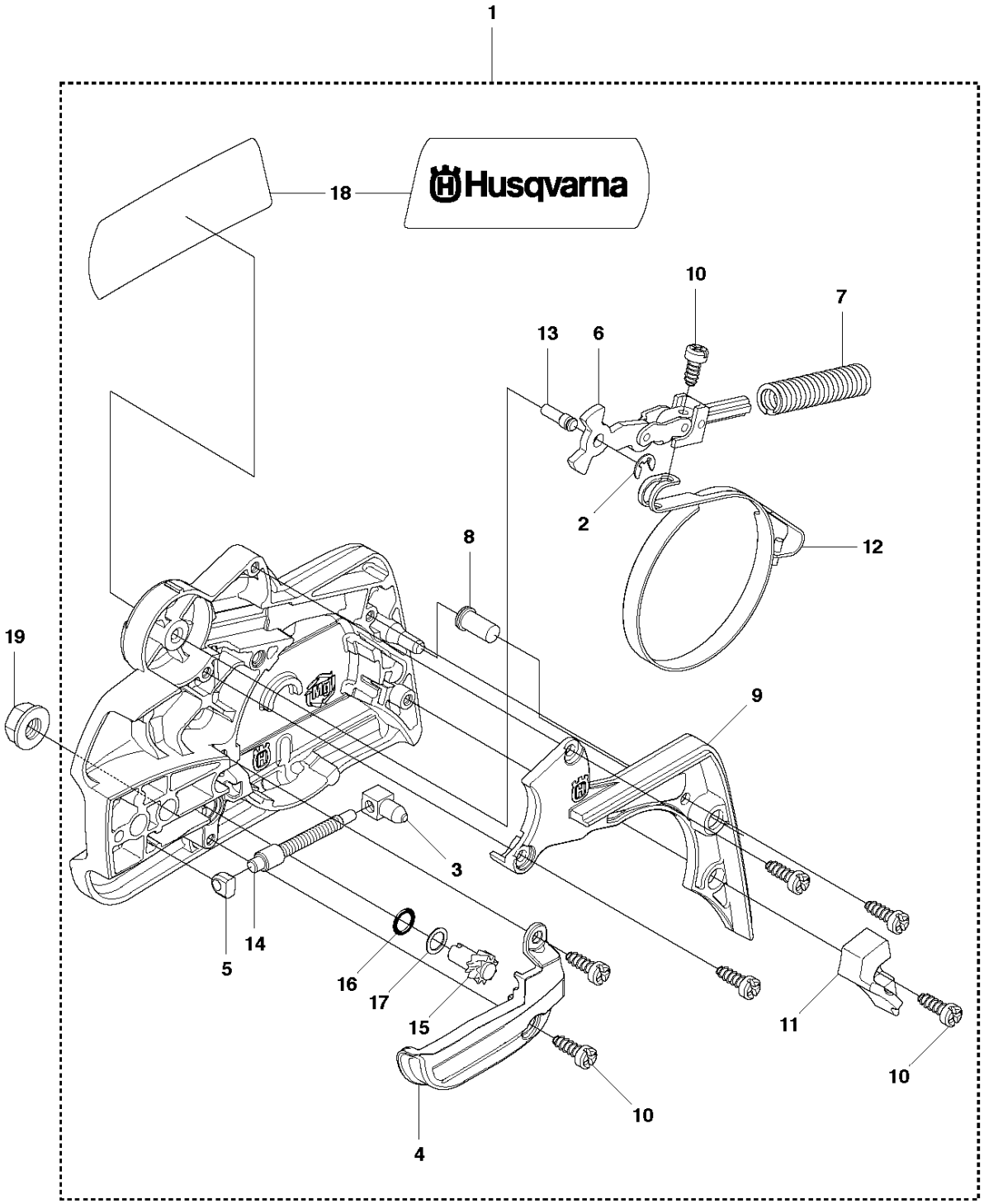

Ref	Part no.	Description	Remark	Qty	Kit
1	501 38 82-01	CLUTCH COVER ASSY			
2	735 31 08-20	E-CLIP		1	1
3	537 28 66-01	PAWL		1	1
4	540 06 33-01	CHAIN GUIDE		1	1
5	537 01 74-01	BEARING SLEEVE		1	1
6	503 89 08-02	KNEE JOINT ASSY		1	1
7	505 89 26-01	BRAKE SPRING		1	1
8	503 85 52-01	GUIDE BUSHING		1	1
9	544 24 85-01	COVER LID		1	1
10	503 21 70-10	SCREW CCRPANT		7	1
11	544 25 31-01	WEAR PROTECTION		1	1
12	544 30 60-01	BRAKE BAND ASSY		1	1
13	503 89 29-01	PIN KNEE-JOINT		1	1
14	537 39 70-01	WORM SCREW		1	1
15	537 07 94-02	WORM WHEEL		1	1
16	740 48 07-02	O-RING		1	1
17	503 23 00-63	WASHER		1	1
18	544 37 68-01	LABEL		1	1
19	503 22 00-01	HEXAGON NUT FLANGE		1	

B **435 II, 435e II**
CLUTCH & OIL PUMP

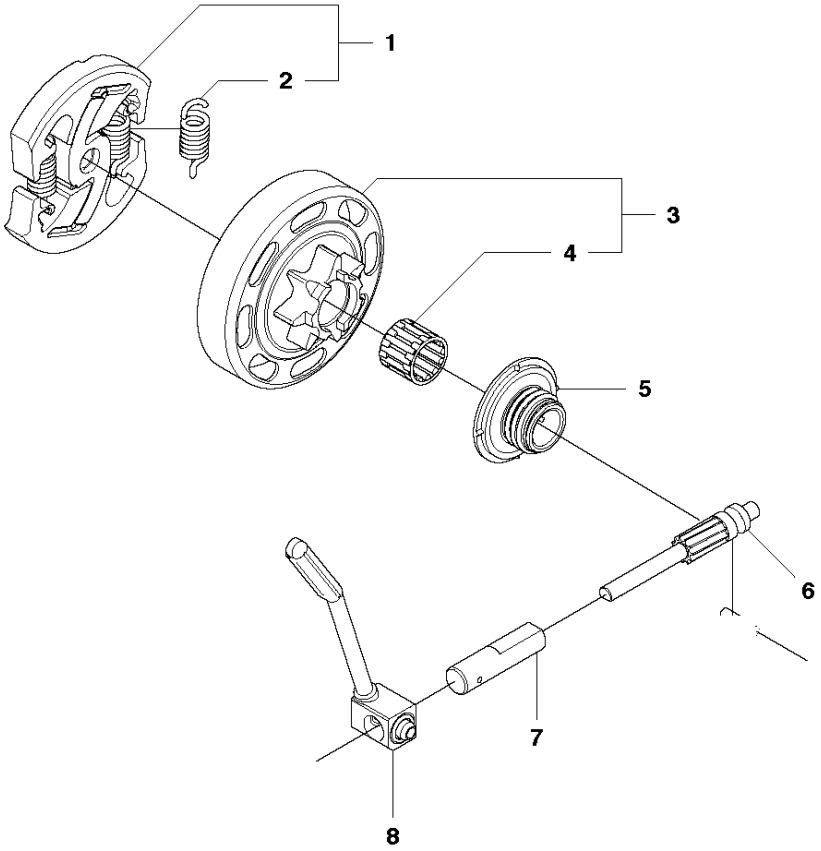

Ref	Part no.	Description	Remark	Qty	Kit
1	575 56 80-01	CLUTCH ASSY		1	
2	574 71 88-01	CLUTCH SPRING		2	1
3	505 44 15-01	CLUTCH DRUM		1	
4	503 53 92-01	NEEDLE BEARING		1	3
5	544 21 24-02	WORM GEAR		1	
6	540 05 79-01	PUMP PISTON		1	
7	537 15 48-01	PUMP CYLINDER		1	
8	544 08 42-01	OIL HOSE		1	

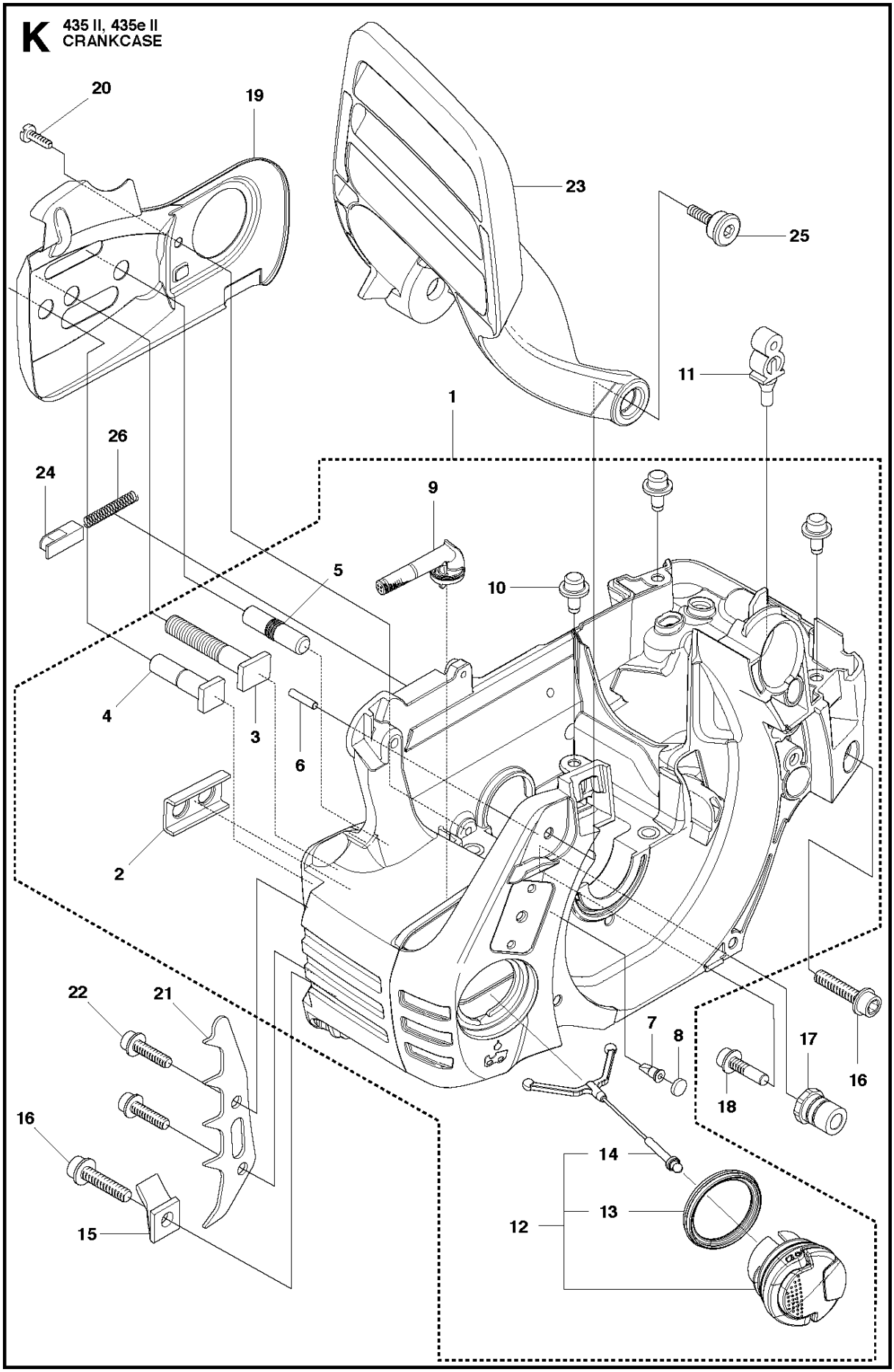
K
435 II, 435e II
CRANKCASE
20
19
23
25
11
1
26
24
9
5
10
4
3
6
2
22
21
7
8
17
16
18
16
14
13
12
15

Ref	Part no.	Description	Remark	Qty	Kit
1	544 93 25-07	CRANKCASE ASSY		1	
2	503 87 58-02	STIFFENING PLATE		1	1
3	503 87 54-02	BAR BOLT		1	1
4	537 33 46-01	BAR BOLT		1	1
5	544 03 64-01	BAR BOLT		1	1
6	503 24 09-05	NEEDLE ROLLER		1	1
7	530 02 61-19	CHECK VALVE		1	1
8	537 40 35-01	FILTER		1	1
9	544 08 33-01	OIL SCREEN		1	1
10	544 33 16-01	GUIDE PIN		3	1
11	503 86 93-01	CARBURETTOR MOUNTING		1	
12	522 62 00-01	TANK CAP ASSY		1	1
13	537 21 50-01	SEALING		1	1,12
14	503 57 89-01	HOLDER		1	1,12
15	503 88 63-01	CHAIN CATCHER PIN		1	
16	503 21 88-76	SCREW IHSCFT		2	
17	501 00 76-01	LATERAL SUPPORT		1	
18	503 21 51-03	SCREW IHSCFT		1	
19	544 28 46-01	CHAIN GUIDE PLATE		1	
20	503 21 70-10	SCREW CCRPANT		1	
21	544 28 65-01	INDRE BARKSTØD		1	
22	503 21 75-20	SCREW IHSCFT		2	
23	544 25 15-01	HAND GUARD		1	
24	503 89 24-01	LOCK		1	
25	503 89 30-01	SCREW		2	
26	503 43 65-01	POSITION SPRING		1	

J **435 II, 435e II**
CRANKSHAFT

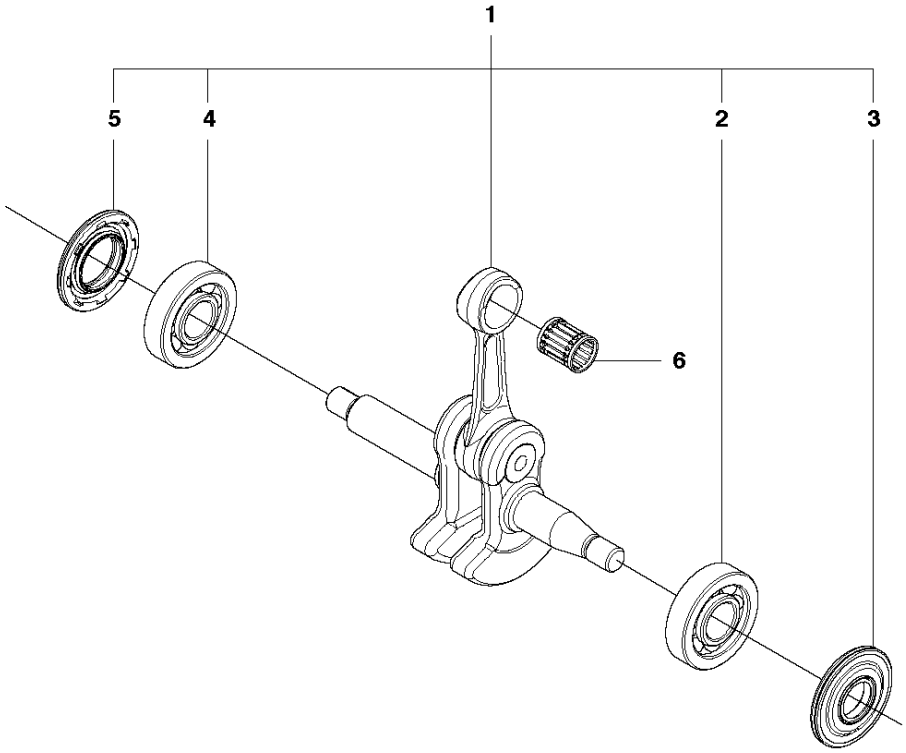

Ref	Part no.	Description	Remark	Qty	Kit
1	525 60 46-01	CRANKSHAFT ASSY		1	
2	544 24 87-02	BALL BEARING		1	1
3	544 25 12-01	SEALING		1	1
4	544 24 88-02	BALL BEARING		1	1
5	544 25 13-01	SEALING		1	1
6	503 41 41-01	NEEDLE BEARING		1	

C **435 II, 435e II**
CYLINDER COVER

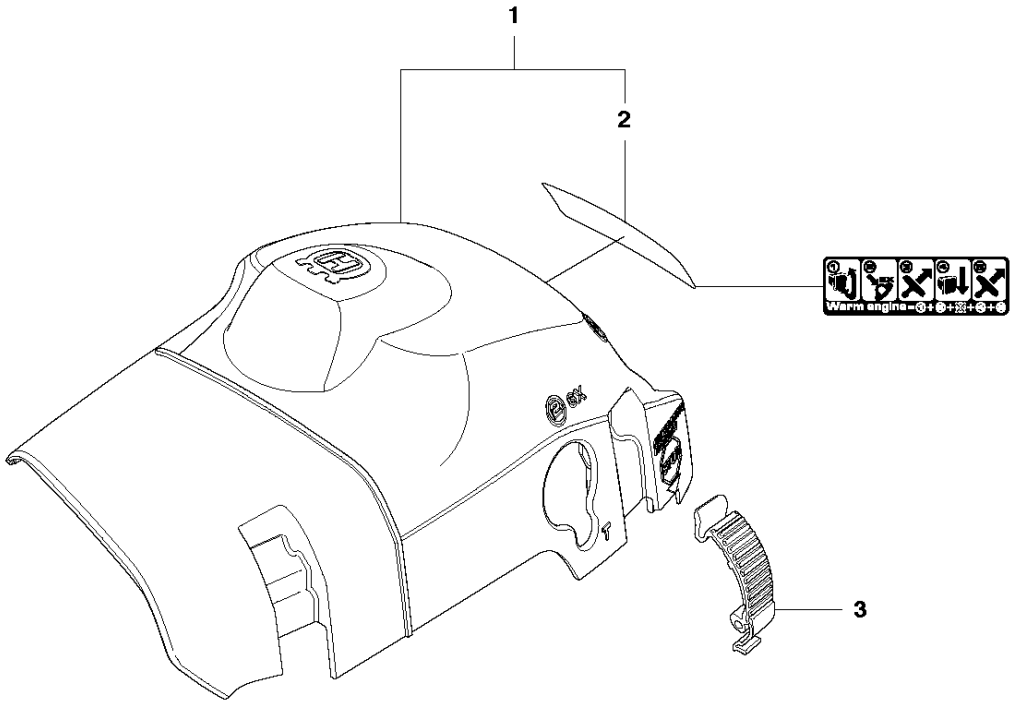

Ref	Part no.	Description	Remark	Qty	Kit
1	504 79 02-01	CYLINDER COVER ASSY		1	
2	522 73 60-01	LABEL		1	1
3	503 89 47-01	SNAP		3	

H 435 II, 435e II
CYLINDER PISTON

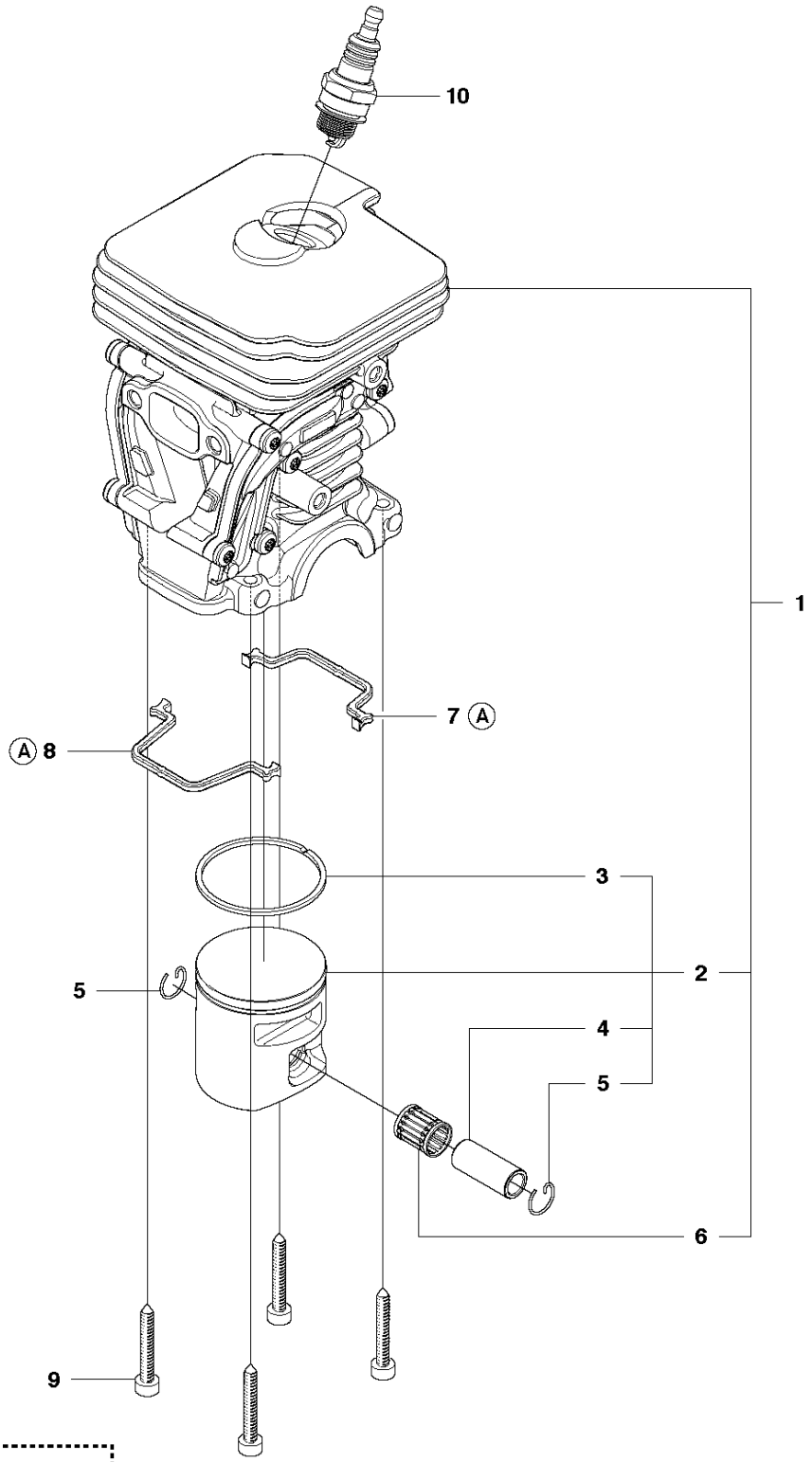

Ⓐ 504 79 40-01
Set of gaskets

Ref	Part no.	Description	Remark	Qty	Kit
1	504 73 51-03	CYLINDER		1	
2	502 62 50-02	PISTON ASSY		1	1
3	544 40 59-01	PISTON RING		1	2
4	544 40 60-01	PISTON PIN		1	2
5	537 39 99-01	CIRCLIP		2	2
6	503 41 41-01	NEEDLE BEARING		1	1
7	544 39 60-01	GASKET		1	11
8	544 39 59-01	GASKET		1	11
9	725 53 33-55	SCREW IHSCM		4	
10	503 23 51-11	SPARK PLUG		1	
11	504 79 40-01	GASKET		1	

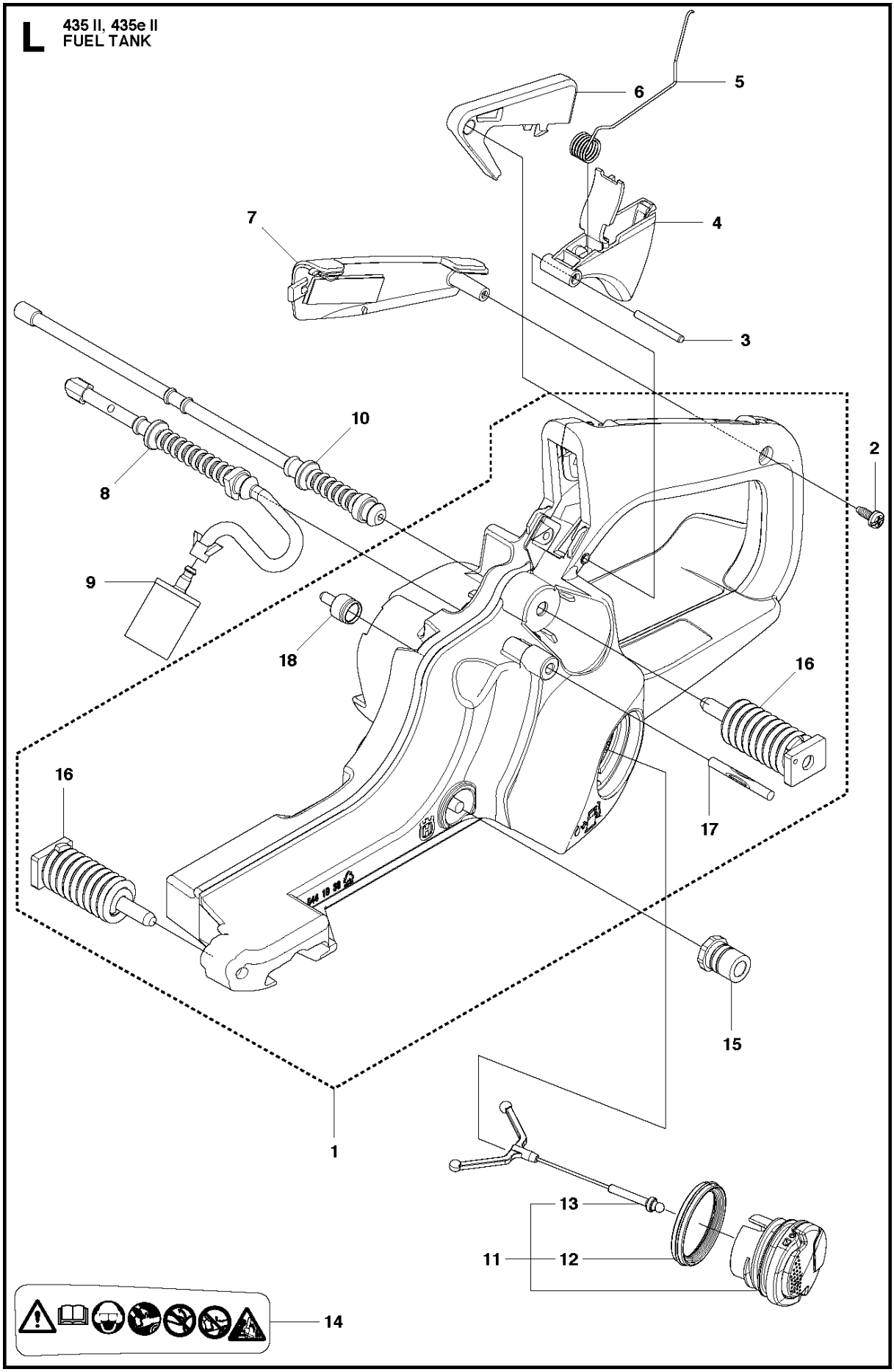
L
435 II, 435e II
FUEL TANK
1
2
3
4
5
6
7
8
9
10
11
12
13
14
15
16
16
17
18

Ref	Part no.	Description	Remark	Qty	Kit
1	544 19 38-05	FUEL TANK		1	
2	503 21 28-10	SCREW CCRPANT		1	
3	720 18 25-20	PARALLEL PIN		1	
4	544 96 85-01	THROTTLE CONTROL		1	
5	544 09 99-01	SPRING		1	
6	579 23 94-01	THROTTLE LOCKOUT		1	
7	544 28 49-01	HANDLE INSERT		1	
8	578 76 43-01	FUEL HOSE		1	
9	503 44 32-01	FILTER		1	
10	577 53 51-01	RETURN HOSE		1	
11	522 62 00-01	TANK CAP ASSY		1	
12	537 21 50-01	SEALING		1	11
13	503 57 89-01	HOLDER		1	11
14	544 37 50-01	LABEL		1	
15	501 00 76-01	LATERAL SUPPORT		1	
16	504 79 56-01	ANTIVIBRATION ELEMENT		2	1
17	721 12 63-39	GROOVED PIN		1	1
18	537 35 95-01	TANK VENT ASSY		1	1

M 435 II, 435e II
HANDLE

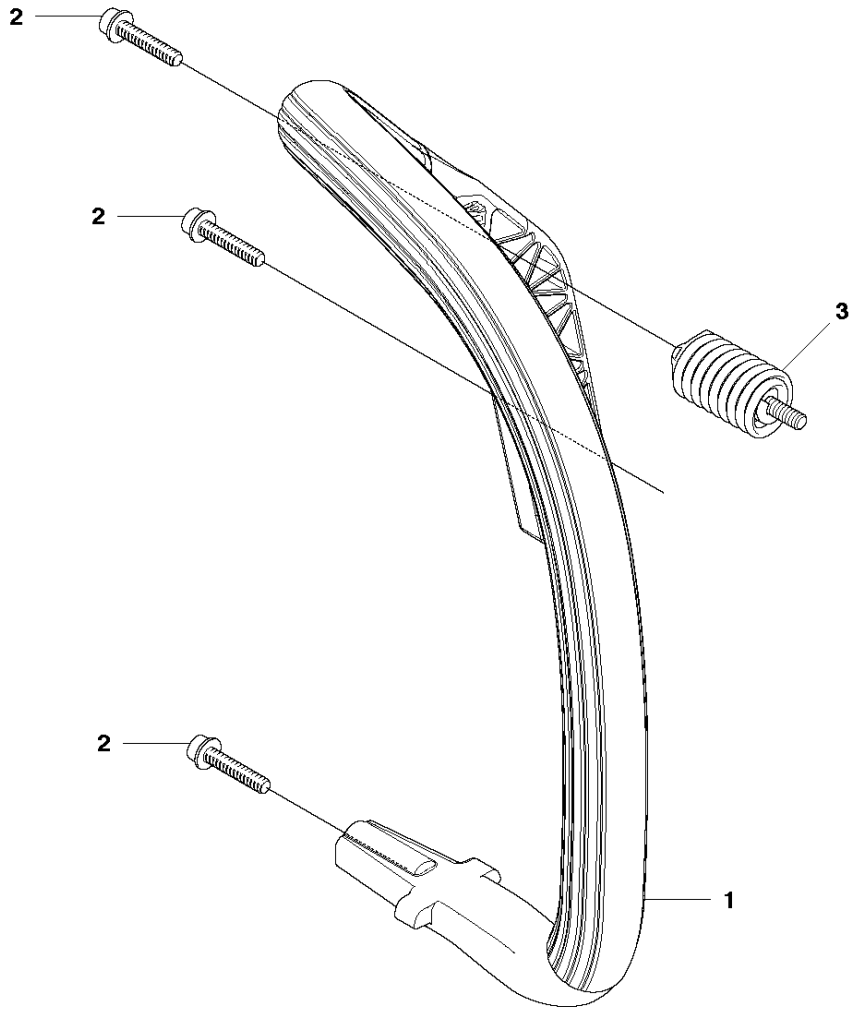

Ref	Part no.	Description	Remark	Qty	Kit
1	544 28 40-01	FRONT HANDLE		1	
2	503 21 88-76	SCREW IHSCFT		3	
3	503 89 83-01	ANTIVIBRATION ELEMENT		1	

E **435 II, 435e II**
IGNITION SYSTEM

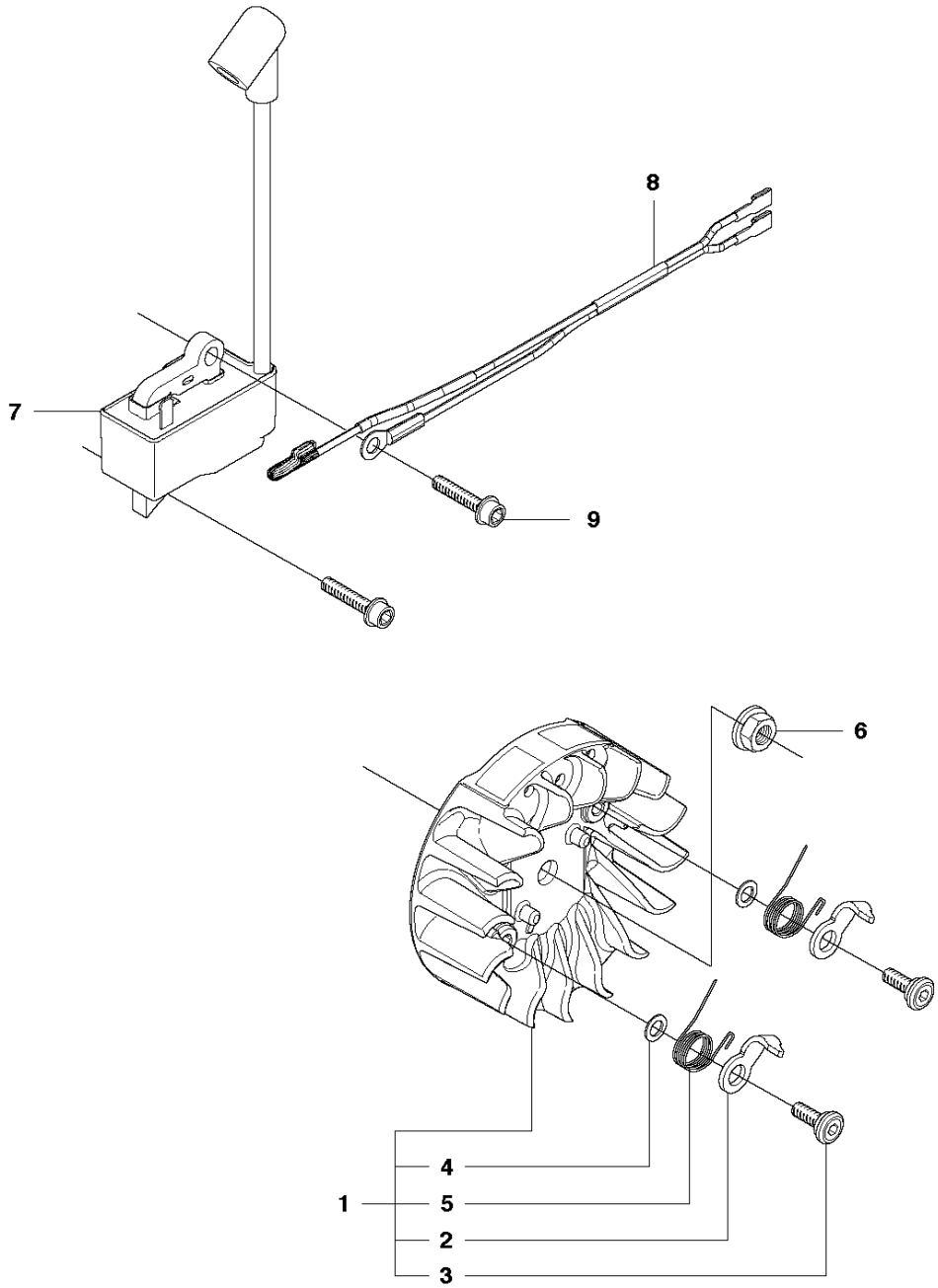

Ref	Part no.	Description	Remark	Qty	Kit
1	580 27 98-01	FLYWHEEL ASSY		1	
2	537 24 56-01	STARTER PAWL		2	1
3	501 81 99-03	SCREW		2	1
4	503 23 00-42	WASHER		2	1
5	529 27 11-01	SPRING		2	1
6	503 22 04-01	NUT		1	
7	579 63 88-01	IGNITION MODULE		1	
8	510 10 14-01	WIRING ASSY		1	
9	503 20 02-20	SCREW IHSCFM		2	

F **435 II, 435e II**
MUFFLER

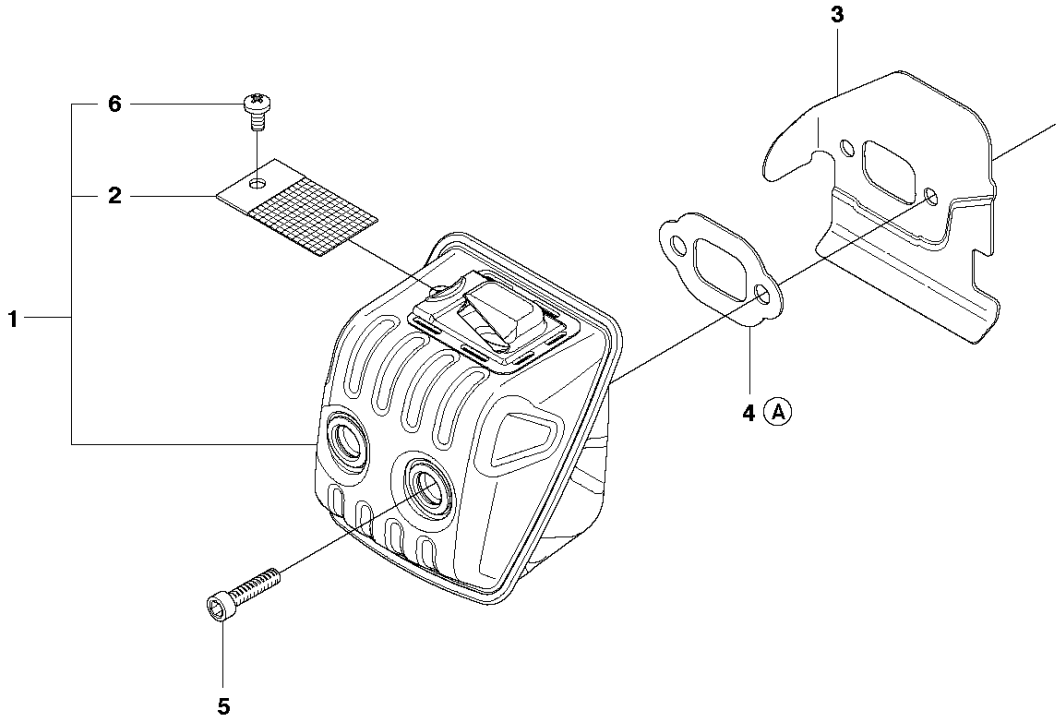

7

Ⓐ 504 79 40-01
Set of gaskets

Ref	Part no.	Description	Remark	Qty	Kit
1	544 14 77-02	MUFFLER ASSY		1	
2	503 86 36-01	SPARK ARRESTOR SCREEN		1	1
3	501 32 31-01	HEAT DEFLECTOR		1	
4	544 08 44-01	GASKET		1	7
5	725 53 68-55	SCREW IHSCM		2	
6	724 12 87-59	SCREW CRPANM		1	1
7	504 79 40-01	GASKET		1	

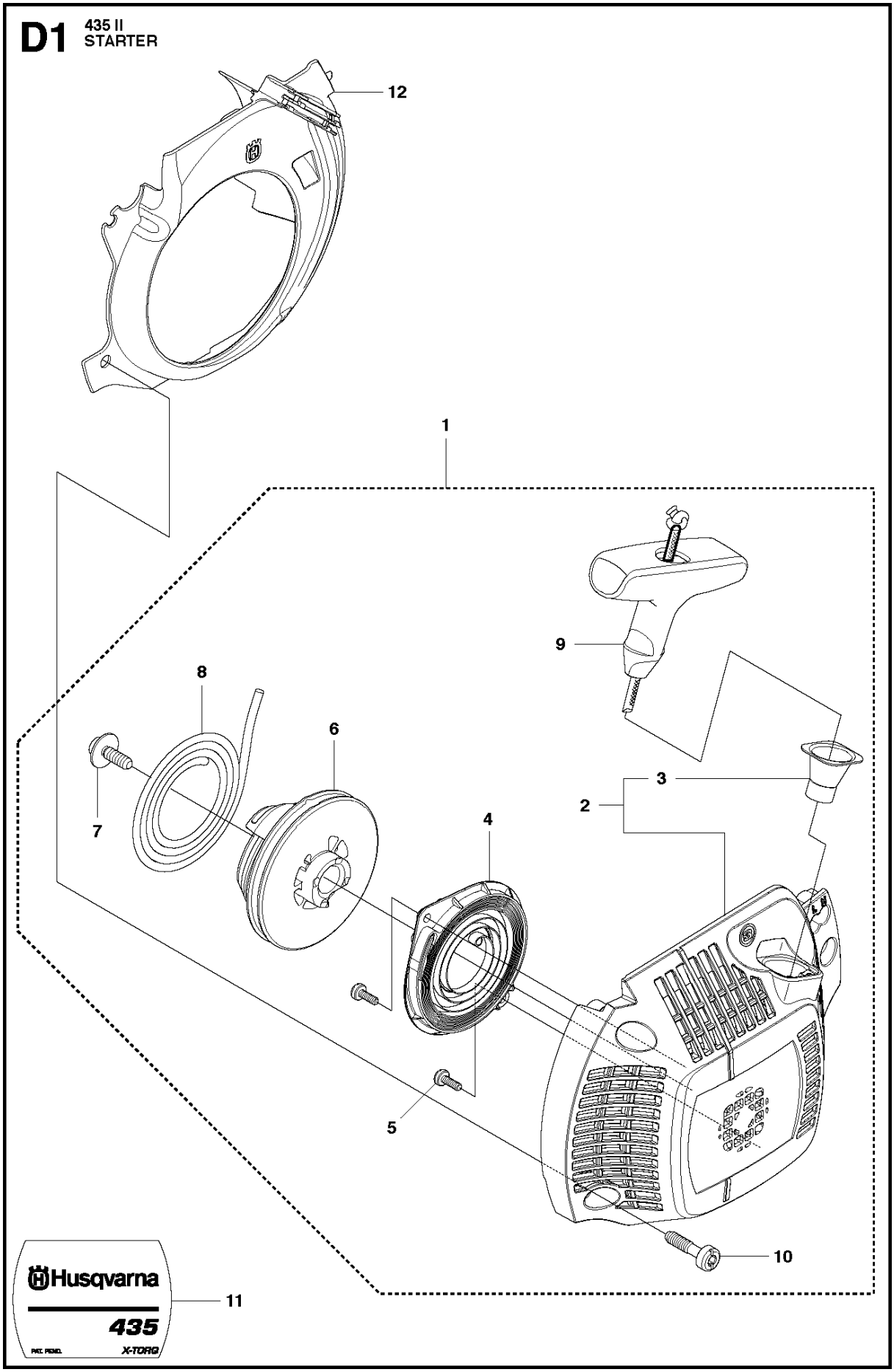
D1
435 II
STARTER
12
1
9
8
6
3
2
7
4
5
10
11
Husqvarna
435
X-TORQ

Ref	Part no.	Description	Remark	Qty	Kit
1	504 59 70-02	STARTER ASSY		1	
2	504 59 69-02	STARTER		1	1
3	537 28 32-01	REINFORCEMENT SLEEVE		1	1, 2
4	540 05 75-02	SPRING CASSETTE ASSY		1	1
5	503 21 28-10	SCREW CCRPANT		2	1
6	504 59 71-01	STARTER PULLEY		1	1
7	503 21 77-16	SCREW IHSCT		1	1
8	505 30 51-25	STARTER CORD		1	1
9	537 23 25-01	STARTER HANDLE		1	1
10	503 21 73-21	SCREW CIHSCTO		4	1
11	504 54 68-01	LABEL		1	
12	544 19 71-02	COOLING AIR CONDUCTOR		1	

Q **435 II, 435e II**
WINTER KIT

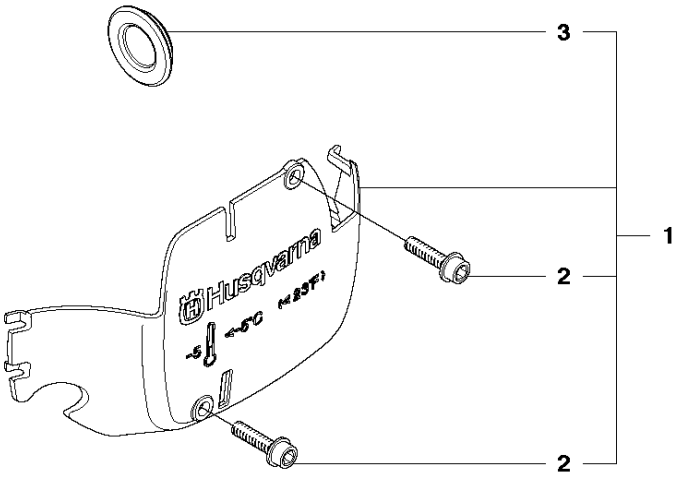

Ref	Part no.	Description	Remark	Qty	Kit
1	505 45 04-01	WINTER KIT	Winter kit	1	
2	503 21 70-16	SCREW CCRPANT	Screw	2	1
3	503 40 59-01	WINTER PLUG	Winter plug	1	1