INSTRUCTIONS

FOR OPERATING AND SERVICING
PARTS LIST INCLUDED

Mall

MODEL 6
2 CYCLE GASOLINE ENGINE

CHAIN SAW

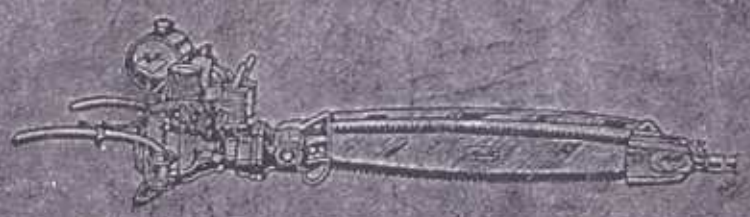

FOR SERIES 18427-6

MALL TOOL COMPANY
7740 SOUTH CHICAGO AVENUE
CHICAGO 19, ILLINOIS

District Offices and Service Stations in Principal Cities

INSTRUCTIONS FOR OPERATING

MALL MODEL 6

2 CYCLE GASOLINE ENGINE CHAIN SAW

MIXING GASOLINE AND OIL: Mix with each gallon of regular gasoline (high test or Ethyl not required) ¾ pint of good motor oil, S.A.E. 30 preferable. It is very important that this fuel be kept clean. A suitable container with a flexible hose is furnished with each machine for gasoline.

Mix the fuel well by shaking the mixture of gasoline and oil in the container furnished before pouring it into the gasoline engine tank. When the gasoline engine is new, use 1 pint of oil per gallon of gasoline.

A gasoline filter is provided on top of the gasoline shut-off valve. This is very effective in preventing dirt and water from getting into the carburetor. If necessary, this filter can be removed and washed out with clean gasoline and replaced.

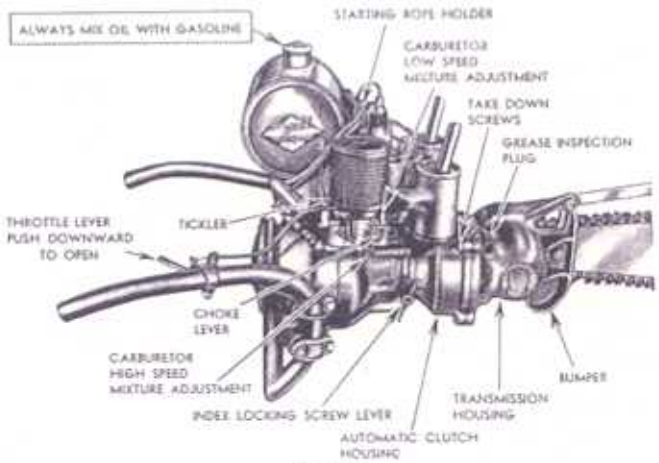

FIGURE 1

Make sure that it is between ⅓ and ⅓ full of a semi-fluid grease. This grease can be Mall Grease No. 18347 or equal.

LUBRICATION OF THE SAW CHAIN: For lubricating the chain of the No. 18427 Seres chain saw with the No. 26600 Quick Detachable Idler: (See Figure 2) Oil the chain frequently with an oil can using a medium grade oil. This may be done through the holes provided on the idler or directly onto the inside of the chain when it is running slowly. Kerosene may be mixed with the oil, or used separately alternately with the mixture of kerosene and oil to cut the pitch that may accumulate on the chain from certain kinds of pitchy woods.

The idler sprocket bearing (a double roller bearing) should be packed with a clean grease after each two weeks of use. To do this, remove the nut on the outside of the sprocket and pack with clean heavy grease. This grease can be Mall Grease No. 18347 or equal. Be sure to replace the cotter pin.

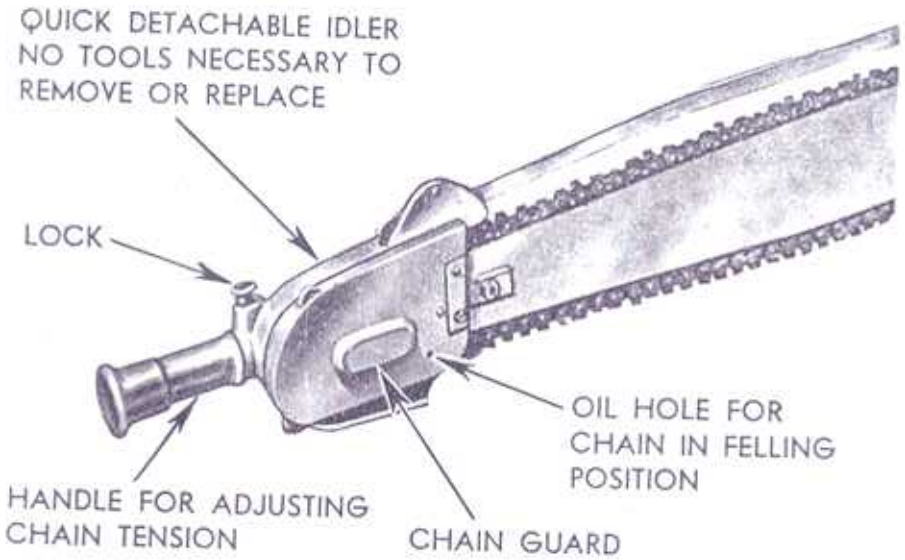

NO. 26600 QUICK DETACHABLE IDLER

FIGURE 2

For lubricating the chain of the No. 18428 Series Chain Saw with the No. 16700C Automatic Oiling Idler: (See Figure 3) Normally, the chain is lubricated automatically by the idler. The amount of oil in the oil reservoir is shown by the indicator on the handle. To start oil feeding, release the oiler shut-off valve by turning to the left and allowing the handle to come to the top of its stroke. A few strokes up and down by the plunger will start the oil to flowing after the machine has been idle.

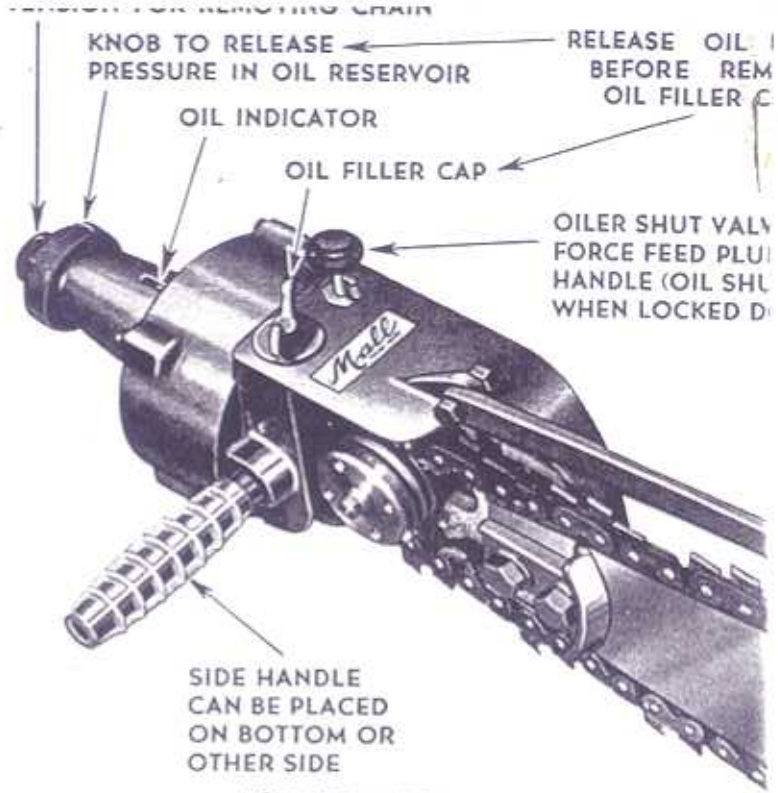

NO. 16700C AUTOMATIC OILING IDLER

FIGURE 3

In certain types of wood, a combination of oil and sawdust te the oil outlet. In case this happens, and the chain runs too dry ly work the plunger up and down through its full stroke. This the oil through. When finished sawing, push the plunger dow there by turning the bayonet lock. This stops the flow of Figure 3.) If oil feeds too freely, it may be controlled by l plunger up for short periods of time or by using a heavier o

To Fill the Idler Reservoir with Oil: (See Figure 3) Release sure in the oil reservoir by turning the larger knurled knob o handle to the left as indicated by arrow on end of knob, unti cator reads full or nearly full. Remove the filler cap on top o fill with motor oil, having a viscosity between S.A.E. 20 and mixed with transmission grease, preferably 600W to get a the proper consistency to flow at the desired rate in any te Usually, in summer temperature, a fifty-fifty mixture is ab

However, the proportions can be varied to suit any temperature condition. Replace cap tightly and return knurled knob by turning to right as far as possible. The side handle on the idler may be unscrewed and screwed into the side of the knurled knob to facilitate turning it. As the chain runs, it is oiled through the idler sprocket.

TO START THE GASOLINE ENGINE: (See Figure 1) Turn on the gasoline by opening the valve under the gasoline tank. Tickle by holding the "Tickler" on top of carburetor down until the gasoline comes out of the hole on the float bowl cover opening. When the engine is cold, choke it by pulling the choke lever up. Firmly grasp the right handle bar with the left hand and hold the throttle about half open by pushing it downward. A spring return closes the throttle when hand is removed. Give the engine a quick vigorous spin. Two or three spins usually start a cold engine. As the motor starts, push the choke lever down slowly and control the engine speed with the throttle lever.

Often it is easier to start an engine by "rocking" it first. To do this, wrap the starting cord around the starting pulley, turn the engine backward against compression, hold the stop button down with the left hand, and pull the starting cord quickly until the engine comes up against the next compression. Then allow it to bounce backwards against compression.

By bouncing or "rocking" the engine back and forth six or eight times this way with full choke, and after tickling, a charge will get pulled into the cylinder so that it will start the first time it is pulled over. Before pulling it over, put the choke lever in half choke position. Be sure to hold the stop button down while doing this to prevent kicking.

When not under load, the motor MUST NOT be run at high speed, just as you do not race your automobile engine when running idle. Under normal conditions, do not leave the choke up for over 3 or 4 pulls. When the engine is hot do not choke at all. A cold engine in sub-zero temperature requires a little more choking. Additional priming may be had by tipping the engine over about 45 degrees toward the carburetor and squirting gasoline in the small hole on top of the upper exhaust pipe near the cylinder. Turn the flywheel back and forth a few times with the engine in this tipped position to allow the gasoline to get into the engine. Then start the engine as usual.

THE CARBURETOR: The high speed mixture is adjusted by using a screw driver on the lower mixture adjusting screw. The normal opening for this is 1¼ turns from the closed position. The idle mixture is also adjusted with a screw driver on the upper adjusting screw. The normal opening for this is about ⅝ths of a turn.

If the carburetor is out of adjustment, adjust the needle valves to above settings, get the engine warmed up, and readjust to best running

condition. Adjust the high speed screw (lower screw) while sawing to get best performance. Then adjust idle to proper engine speed. To make engine idle slower, enrichen idle mixture. The idle speed should be just slow enough so as not to operate the chain.

THE MAGNETO BREAKER points should be clean, smooth, set squarely and be adjusted to .018-.022 maximum gap. It is a good idea to clean the points by drawing a piece of paper through them. Turn the engine so that the points come together, open them, insert a clean piece of paper, similar to wrapping paper, and pull it through the points, being careful NOT to pull it out. Open the points with your fingers and remove the paper. On the torn edge of paper there are always loose fibres which will stay between the points if you do not open the points as described above.

To gain access to the magneto breaker points, remove the flywheel. To remove the flywheel, first remove the screen, remove the three screws holding the flywheel lock, remove the large washer with the hexagonal hole, replace the puller plate (large washer with round hole) and three screws and use flywheel nut as a puller by turning it off. The tire wrench from your car fits this nut . . . do not put a bar in the flywheel as damage will be done. Back the nut off enough to put some tension on the wheel. Then while your helper pulls on the flywheel, give the nut a sharp tap with a BRASS hammer.

To replace the flywheel, remove the puller washer, flywheel nut, and its lockwasher from flywheel. Inspect the taper on the crankshaft and in the flywheel to assure yourself that both are perfectly clean so that when assembled, the taper will have a perfect fit. The Woodruff Key should fit snugly in its keyway. If it is loose, many times it can be made to fit by hitting it on the bottom with a hammer to slightly upset it. Be sure you have a good hold on the Woodruff Key with pliers before hitting for if you don't hit squarely, it will fly. The flywheel is now ready to replace. Be sure the Woodruff Key is in properly and that the keyway in the flywheel lines up with it. Tighten the flywheel nut, using a hammer on the wrench handle while your helper holds the flywheel from turning. Be sure that this nut is VERY TIGHT. Replace the locking washer with the hexagonal hole in it. If the holes do not line up, turn it upside down and it will line up. Replace the puller washer and the three screws and lockwashers. Replace the fan screen.

The complete magneto may be removed by removing the Plate No. 27208 (See Drawing 27200), then the rotor and then the plate No. 27239 shown on Drawing 17410-BC Sheet 2. There are 2 tapped holes in the rotor into which the long screws of the puller in the tool kit may be screwed for pulling the rotor.

This engine has a fixed spark. In case it gives trouble with kicking when starting, the spark may be retarded by loosening the magneto as described above and turn the magneto assembly clockwise a few degrees. This should not be turned more than necessary as it will reduce the power at high speeds.

The clutch shoe and flange may be removed by using the puller provided in the tool kit using the two short screws.

The clutch springs may be removed by prying off with No. 16114 tool which has one end flattened and bent. They may be assembled by using the other end of the same tool which is cup-shaped. Slip this end through the eye of the spring and place cupped end over the spring pin and slip spring in place.

TO INDEX SAW TO CUT AT DIFFERENT ANGLES: There are four positions in which the saw may be set to cut (1) downward for bucking, (2) right for felling, (3) left for felling, (4) upward for under-cutting. The entire saw may be tilted sufficiently to get intermediate positions. To index, release the index locking device by pulling out the index release handle on the side of the crankcase and turn the blade to the desired notch where the lock will snap into the locked position. If the lever is turned about 45 degrees after pulling out, the lock will not drop into place as the notch goes by. This may be used to advantage where one man wishes to index without help.

To separate the engine from the transmission and saw for easier carrying, remove the four take-down screws 102025 (see pages 14 and 15) and pull the two units apart. In replacing, make sure all parts are clean.

Do not attempt to run the engine while the transmission is detached as the clutch shoes will fly out and ruin the springs.

TO STOP THE ENGINE: Press the button on the handle bar near the throttle until the engine stops.

AUTOMATIC CLUTCH: The transmission on this chain saw operates automatically. As the gasoline engine speeds up, the clutch gradually engages and pulls the saw with it; as the engine slows down, the clutch disengages. If the saw is forced into a cut by an inexperienced operator too quickly, such as to slow the engine down to an ineffective speed, the engine is automatically released. The clutch facing is easily accessible by separating the two parts. No adjustment is necessary on this clutch. Occasionally clean the lining.

TO REMOVE THE SAW CHAIN: (Model 18428 using automatic oiling idler) Loosen the chain by turning the smaller knurled knob on the end of the idler handle to the left and pushing in. Lift the chain out of the guide plate groove and off the sprocket. To adjust the chain tension, tighten the knurled knob until only its knurled portion is visible.

(Model 18427 using Quick Detachable Idler). Loosen the chain by turning the idler handle to the left after lifting the small locking knob above it to unlock. This may be fixed in the unlocked position by giving it a slight turn while it is in the up position. The chain may now be removed. In replacing the chain guard on the idler, hook it over the lower lug first, then the upper lug and push the hole over the stud and lock. No tools are necessary.

TO REMOVE THE QUICK DETACHABLE IDLER no tools are necessary. Loosen the chain as above and lift sidewards from sprocket. The idler may now be pulled off. A slight jar by pulling the handle outward will release the idler if it is stuck. The removal of the quick detachable idler is very useful when it is necessary to remove the saw from the kerf and a wedge prevents normal removal.

A "T" shaped spring holds the idler in place. The top ends of the "T" catch the inside corners of the guide plate and the bottom of the "T" holds at the throat of the one inch wide slot in the guide plate. The idler is held on by the tension of the chain. To adjust the chain tension, tighten by turning the idler handle until the chain can be lifted about ½" out of the center of a 3 foot guide plate without much effort. The amount of lift at center should be increased on the longer saws.

OPERATING THE SAW: The bumper, which is the part of the gear housing to which the saw plate is fastened, must be placed and held against the log before the teeth begin cutting. The saw guide must be kept in the middle of the cut so that the teeth returning in the upper groove do not cut into the sides of the kerf. Feed the saw into the timber slowly. The rate of feed will depend on the kind and size of timber. When making a deep cut, the saw slot should be spread with a wedge to prevent pinching of the guide bar and chain saw. Many times it will be found possible to cut faster if operators advance their ends separately. Do not expect to cut fast with a dull chain. Sharpen it with a MALL Chain Sharpener.

TREE FELLING: Index the saw to cut horizontally. Tip the engine so as to cut downward at a small (about 20 degree) angle and saw in about ¼ to ⅓ the diameter of the tree on the side towards which the tree is to fall. Remove the saw and cut in horizontally to meet the bottom of the above cut and remove the wedge shaped piece. On the opposite side of the tree make another cut about 2" or 3" above the last cut. As soon as the tree inclines, remove the saw to a safe distance. When felling heavy trees, it is advisable to insert wedges in the cut.

Ordinarily it is easier to fell trees if the blade is indexed to the upper position; however, if a low cut or low stump is desired, the blade may be indexed to the lower position making it possible to have a stump only 1½" high. This will increase the lumber yield considerably. This low stump is easily driven over by trucks and tractors.

FELLING WITH LONG MACHINES (5 feet or over): The guide plate is made thin to keep the machine light and also to permit a narrow kerf, thus reducing the power necessary. No guard bar is used on long machines.

Index the saw to upper felling position. Bolt bracket No. 16927 onto the ear on the gear housing normally used for the guard bar. The bracket end should be extending downward. If the 16700C idler is used, bolt the similar bracket onto the idler guard bracket ear, with the bracket end pointing upward. If the No. 26600 idler is used, the guard bar rivet should be removed and bracket bolted on using the rivet hole for the bolt

Use a board, 1" x 3", with ends tapered back about 18", (length depends on the length of the saw), placing one end over the index locking handle (handle vertical), under transmission bracket and over idler bracket. This supports the machine so that the plate is nearly straight. Keep this board in place at all times when the saw is indexed to felling position. Start cuts into tree with this board in place and remove after the saw is in the width of the plate.

The above parts are included with the 5 foot and 6 foot machines.

SERVICE SECTION

How to Clean Around Engine Cylinder Fins

A certain amount of dust and sawdust is drawn through the fan and lodges between the fins of the cylinder. When this happens, the circulation of cooling air is cut down and the engine will overheat. This should be watched and the fins cleaned when necessary.

HOW TO CLEAN AROUND ENGINE FINS: Remove the air cleaner. Remove the air deflectors. Use a wire and dig out the dirt between the fins. Replace parts tightly.

Quick Check for Magneto Spark

Remove the spark plug. Look into the spark plug hole and turn the engine until the piston is on top, dead center, which is the top of its stroke. Hold the end of the spark plug wire in your hand and rest your hand against the cylinder head. Use your other hand to rock the flywheel back and forth, a distance of about a quarter turn. Rock it slowly at first until you get a slight jolt. If you can't feel any jolt, the magneto is out of order.

TREE FELLING, SHOWING WEDGE SHAPED PIECE OF WOOD REMOVED

Instructions for Assembling Needle Bearing Piston to Connecting Rod

In this construction, the needle bearings are pressed into the piston at the factory. The piston pin is pushed through the needle bearing and pressed through the connecting rod. It is recommended that this be done only at your factory. However, this work can be done in shops where good tools are available including a suitable arbor press.

Great care must be taken not to deform the piston or the needle bearing cage. An assembling fixture should be made up into which the piston will fit closely (See Figure 4). This can be made from an old cylinder providing the cylinder wall is in a smooth condition. With a round file, a port in the cylinder wall can be filed out to permit the pin to go through. The bottom of this fixture should be milled off square with the cylinder bore so it will set squarely on the arbor press table. A push pin $^{47}/_{64}$" outside diameter with a $^{9}/_{16}$" diameter, ½" long pilot, should be used to push the old pin out and the new one in.

The crankshaft should be carefully supported while this is being done so as not to bend the connecting rod. The pin should be pressed in just far enough as to be even in the piston when the rod is in the center of the piston. NEVER USE A HAMMER TO DRIVE THE PIN THROUGH AS THIS WILL RUIN A BEARING. BE SURE TO KEEP BEARINGS CLEAN.

Installation of Piston Rings

Only No. 15005 rings should be used in aluminum cylinders.

Assembly of Pistons into the Gasoline Engine

A number of engines have come back to us for repair with the pistons installed backwards. When inserting the pistons in the engine, care should be taken that the piston is put in in such a way as to have the small dowel pin of the lower ring on the side of the cylinder, away from the carburetor. The purpose of this is to locate the piston rings so that their ends will not be able to get caught in the ports. If this piston is put in in the opposite direction, as we have found some returned from the field, it is possible that the lower ring end gets caught in the third port, or the port between the carburetor and the crankcase.

Care should be taken not to install oversized pistons and rings into old cylinders unless they have been previously rehoned to proper oversize. This has been done in some cases and has given trouble. These engines are set up with a piston clearance as shown below which must be maintained. When an iron or sleeved aluminum cylinder shows ring wear such as to show a step at the top of the piston travel, the cylinder should definitely be rehoned to the next oversize and fitted with a new piston and new rings to this new oversize. The plated cylinders wear so slowly that rehoning is unnecessary.

Type of Cylinder	Piston Clearance
Iron	.007
Sleeved Aluminum	.005
Plated Aluminum	.003

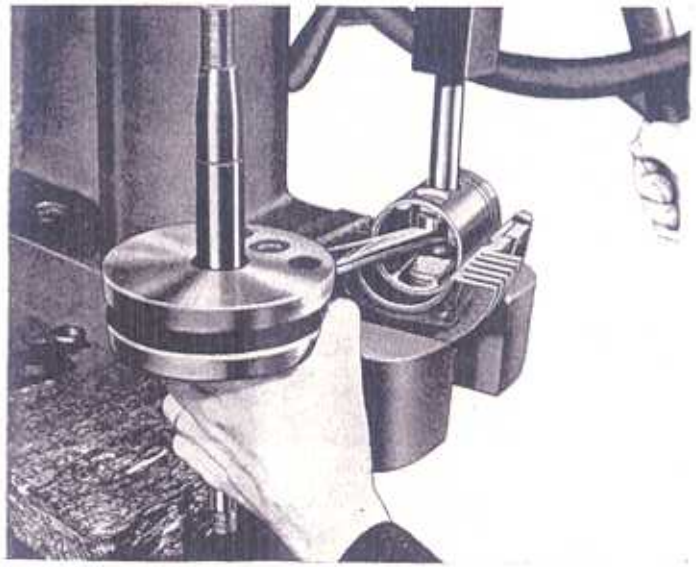

FIGURE 4

HAND FILING INSTRUCTIONS FOR MALL CHAINS

One of the biggest problems in hand filing a chain is the difficulty in holding the chain firmly. We recommend that you leave the chain on the saw. In the event the guard bar is being used, index to the upside down position, then loosen the chain tension so that it is easily rendered with the file. Place the machine on a stump, bench, or anything that will afford a comfortable filing position.

The drawing No. C26794 shows the angles for the teeth that have been found to be best for average cutting. Unless you have found that your type of cutting is better served by different angles, we recommend that you attempt to maintain the angles shown on our drawing. Normally, slight variations will not affect the cutting of the saw.

The heights of the teeth are important. All cutters (outside teeth) should be the same height. The offset rakers (bent center teeth) should be $\frac{1}{64}$" less than the cutters in height and the straight rakers (note: these are not used on some styles of chains) should be $\frac{1}{32}$" less than the cutters.

Virtually all of your filing should be done on the face (leading edge—not top) of the teeth to assure the maintenance of the original heights. Sharpen your chain often enough to keep it sharp. A dull chain not only reduces the cutting efficiency, but throws an additional load on the engine. Careful maintenance of the chain will not only prolong the life of the chain itself but the rest of the saw as well.

(See sketch on page 12)

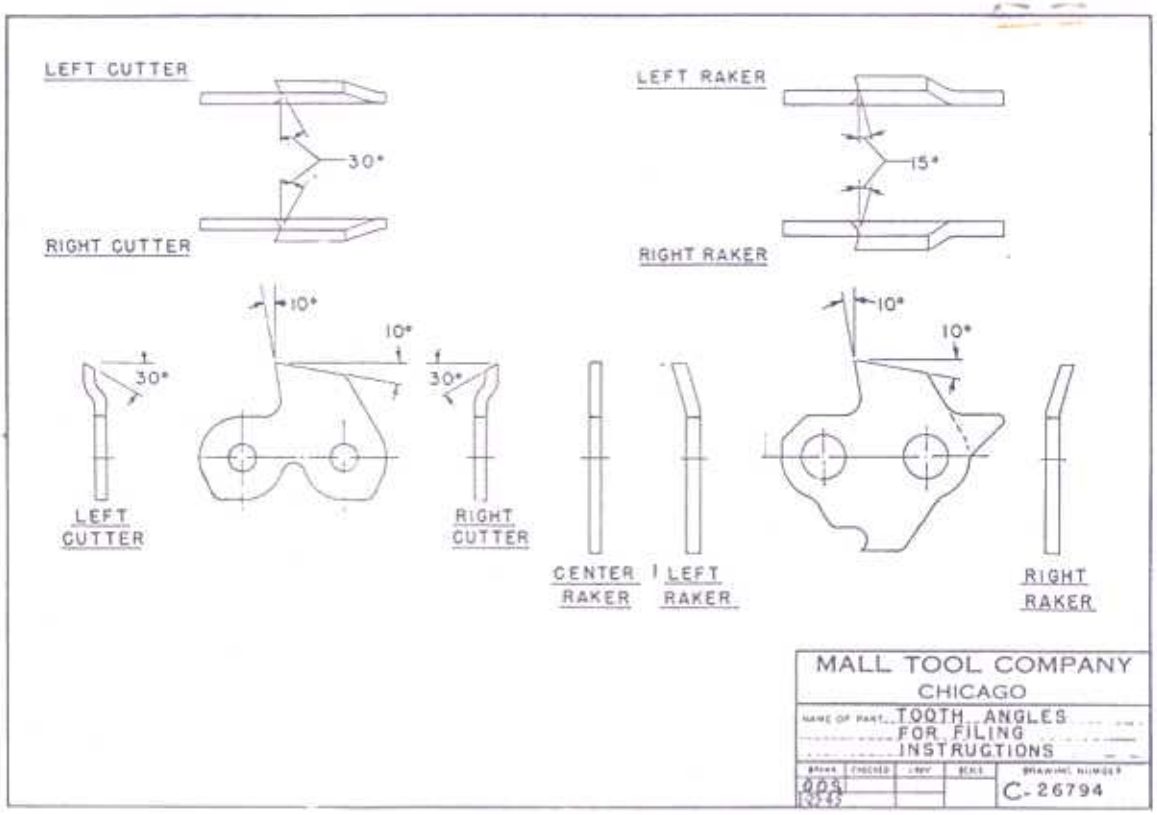

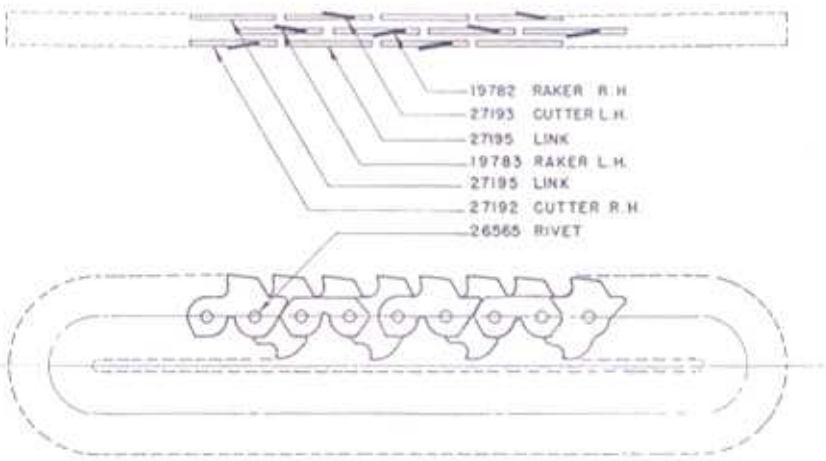

30
24
21
20
11-8

CAPACITY INCHES	ASSEMBLY NUMBER	TOTAL LENGTH	SEQUENCE REQ'D. 27100	27190	ASSORTMENT NUMBER	WEIGHT POUNDS
18	27110	64.5	10	1	27191	2.3
24	27120	76.5	12	1	27191	2.7
36	27130	100.5	16	1	27191	3.6
48	27140	124.5	20	1	27191	4.5
60	27150	148.5	24	1	27191	5.3
72	27160	172.5	28	1	27191	6.2
84	27170	196.5	32	1	27191	7.0
96	27180	220.5	36	1	27191	7.9

MALL TOOL COMPANY
CHICAGO

CHAIN
BAND SAW TYPE 3/4 PITCH 3/16 KERF

DRAWN CHECKED SCALE

C-27110-20
30-40-50
60-70-80

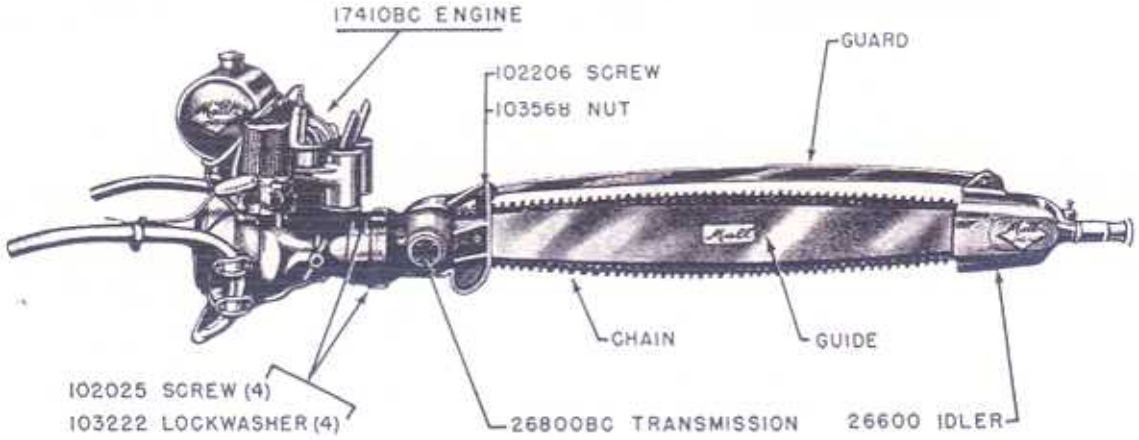

MODEL	ASSEMBLY	SIZE	CHAIN	GUIDE	GUARD
6	18427P	18"	27110	26795	26865
6	18427	24"	27120	26842	26862
6	18427A	36"	27130	26843	26863
6	18427B	48"	27140	26844	26864
6	18427C	60"	27150	26845	16926 A
6	18427D	72"	27160	26846	16926 B

MALL TOOL COMPANY
CHICAGO

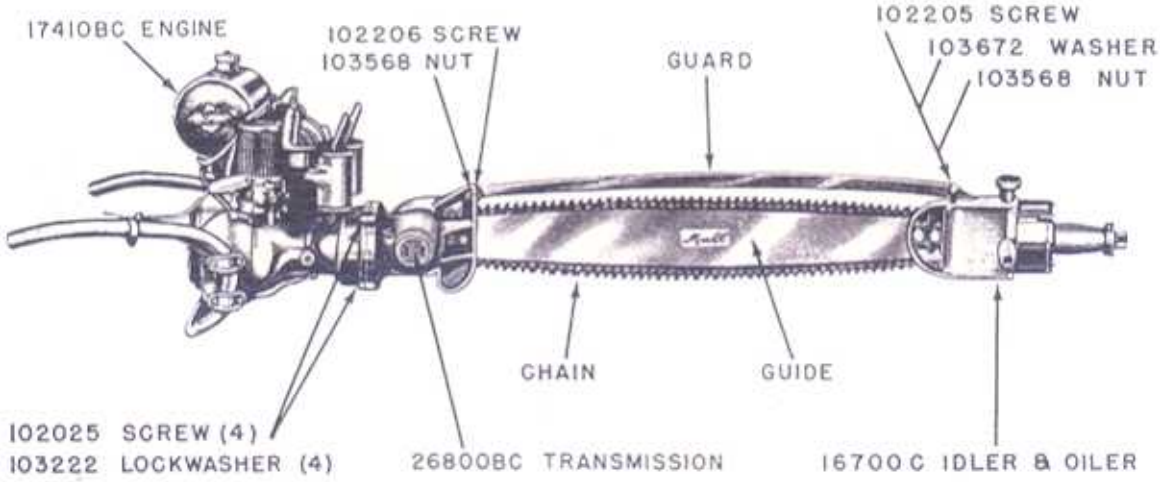

MODEL	ASSEMBLY	SIZE	CHAIN	GUIDE	GUARD
6	18428P	18"	27110	26795	15985P
6	18428	24"	27120	26842	15985A
6	18428A	36"	27130	26843	15962B
6	18428B	48"	27140	26844	15962C
6	18428C	60"	27150	26845	16926A
6	18428D	72"	27160	26846	16926B

MALL TOOL COMPANY
CHICAGO

PRICE LIST

Major Assemblies

Part No.	Description	Price Ea
17410BC	Engine with Clutch Shoe and Flange Assembly	$ 360.00
26800BC	Transmission with Clutch Drum	100.00
26600	Oiless Idler Assembly	25.00
16700C	Automatic Idler Assembly	75.00

CHAINS, GUIDE PLATES AND GUARD BARS

3/8" Kerf Chains

18220	24"	Chain	$27.50
25760	36"	Chain	32.50
18230	48"	Chain	37.50
19345	Chain Assortment		4.00

3/16" Kerf Chains

27110	18"	Chain	$25.00
27120	24"	Chain	27.50
27130	36"	Chain	32.50
27140	48"	Chain	37.50
27150	60"	Chain	42.50
27160	72"	Chain	47.50
27191	Chain Assortment		4.00

Guide Plates

26795	18"	Guide Plate	$25.00
26842	24"	Guide Plate	27.50
26843	36"	Guide Plate	32.50
26844	48"	Guide Plate	37.50
26845	60"	Guide Plate	42.50
26846	72"	Guide Plate	47.50

Guide Bars

26865	18"	Guard Bar	$ 1.00
26862	24"	Guard Bar	1.00
26863	36"	Guard Bar	1.50
26864	48"	Guard Bar	2.00

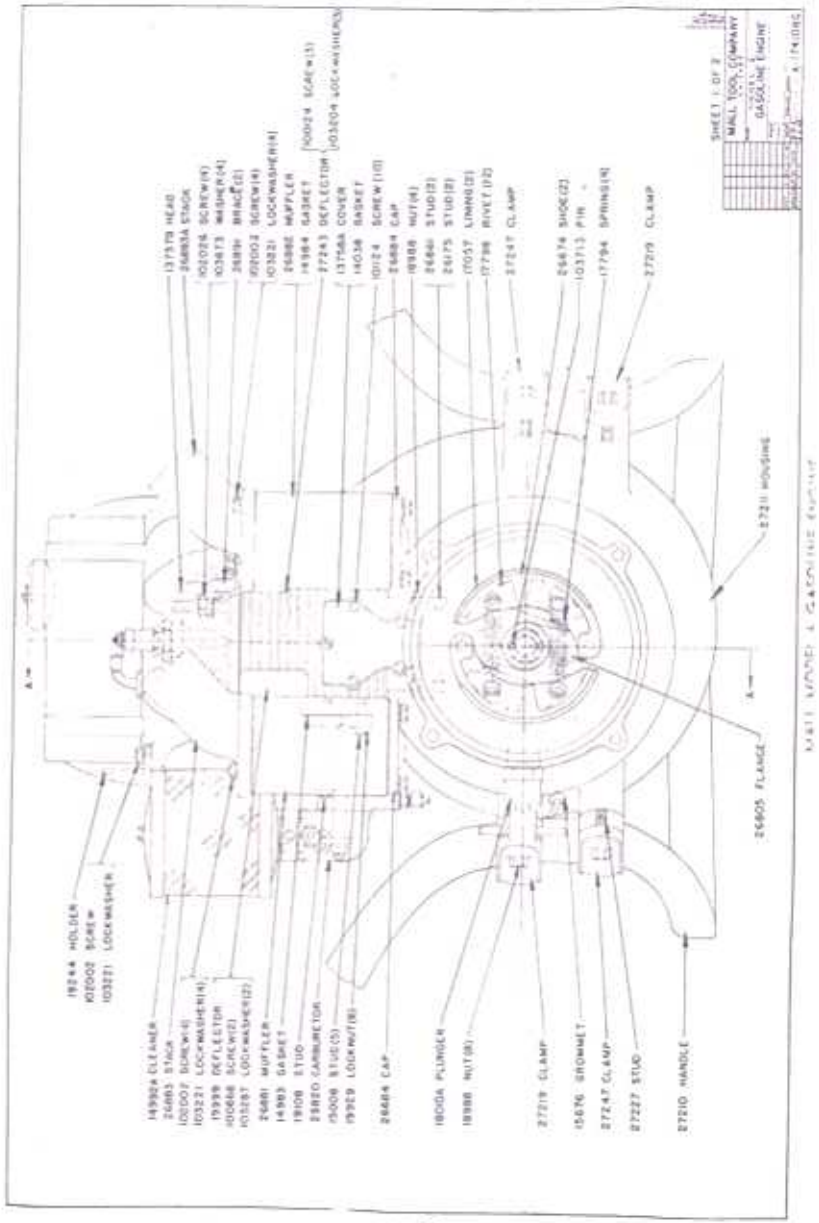

PARTS PRICE LIST

Model 6 Gasoline Engine

Part No.	Description	Price Ea.	Part No.	Description	Price Ea.
13757B	Head	$ 7.95	26882	Muffler	$ 3.25
13758A	Cover	1.35	26883	Stack	1.55
14038	Gasket	.04	26883A	Stack	1.55
14983	Gasket	.15	26884	Cap (2 required)	.10
14984	Gasket	.04	26891	Brace (2 required)	.10
14992A	Cleaner	2.50	27210	Handle	6.60
15008	Stud (5 required)	.10	27211	Housing	41.10
15676	Grommet	.03	27219	Clamp (2 required)	.55
17057	Lining (2 required)	.60	27227	Stud	.25
17794	Spring (4 required)	.15	27243	Deflector	.60
17798	Rivet (12 required)	.01	27247	Clamp (2 required)	.55
18010A	Plunger	2.85	100124	Screw (3 required)	.02
18988	Nut (12 required)	.03	100668	Screw (2 required	.02
19108	Stud	.10	101124	Screw (10 required)	.02
19244	Holder	.15	102001	Screw (8 required)	.02
19929	Locknut (6 required)	.03	102002	Screw (9 required)	.02
19999	Deflector	3.10	102026	Screw (4 required)	.10
25820	Carburetor	20.00	103024	Lockwasher (3 required)	.02
26175	Stud (2 required)	.25	103221	Lockwasher (9 required)	.03
26674	Shoe (2 required)	2.25	103287	Lockwasher (2 required)	.03
26805	Flange	1.90	103673	Washer (4 required)	.03
26861	Stud	.25	103713	Pin	.03
26881	Muffler	3.25			

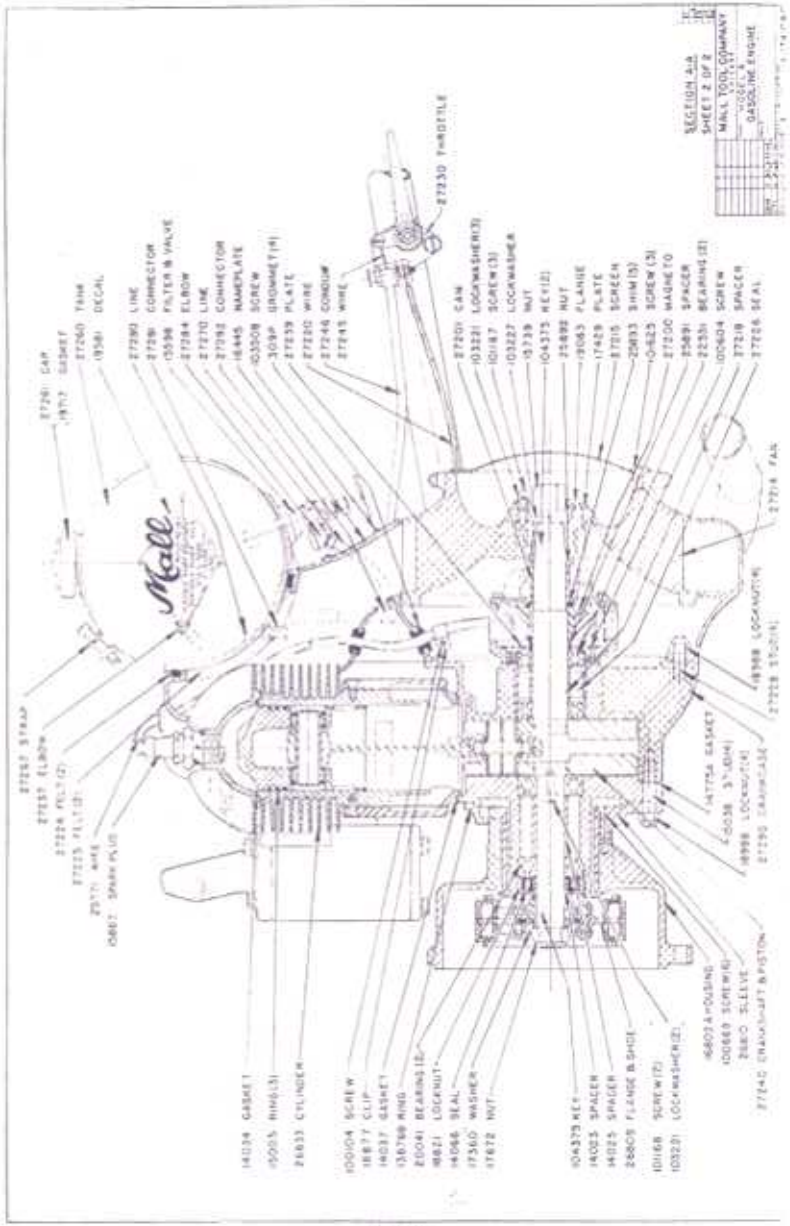

PARTS PRICE LIST

Model 6 Gasoline Engine

Part No.	Description	Price Ea.
309P	Grommet	$ .03
13876B	Ring	6.35
14023	Spacer	2.50
14025	Spacer	1.30
14034	Gasket	.10
14037	Gasket	.05
14066	Seal	.75
14775A	Gasket	.15
15005	Ring	.40
15038	Stud	.15
15598	Filter and Valve	2.10
15739	Nut	1.45
15867	Spark Plug	.55
16445	Plate	.12
16802A	Housing	11.00
17360	Washer	.02
17429	Plate	.30
17672	Nut	.15
18821	Lock Nut	.75
18877	Clip	.03
18988	Lock Nut	.03
19083	Flange	.30
19717	Gasket	.15
20041	Bearing	2.25
22551	Bearing	2.75
25771	Wire	.20
25891	Spacer	.57
25892	Nut	.87
25893	Shim	.03
26809	Flange and Shoe	8.75
26810	Sleeve	17.05
26833	Cylinder	44.00
27200	Magneto	25.00
27201	Cam	2.35

Part No.	Description	Price Ea.
27214	Fan	14.10
27215	Screen	1.05
27218	Spacer	.50
27220	Wire	.40
27224	Felt	.15
27225	Felt	.15
27226	Seal	1.55
27228	Stud	.15
27230	Throttle	6.00
27237	Elbow	.30
27239	Plate	.25
27240	Crankshaft and Piston Assem.	38.75
27245	Wire	.30
27246	Conduit	.30
27260	Tank	6.25
27261	Cap	.40
27267	Strap	.35
27270	Line	.95
27280	Line	1.05
27281	Connector	.25
27282	Connector	.15
27284	Elbow	.35
27290	Crankcase	45.20
100104	Screw	.02
100604	Screw	.03
100669	Screw	.03
101167	Screw	.03
101168	Screw	.05
101625	Screw	.03
103221	Lockwasher	.02
103227	Lockwasher	.03
103508	Screw	.02
104375	Key	.05

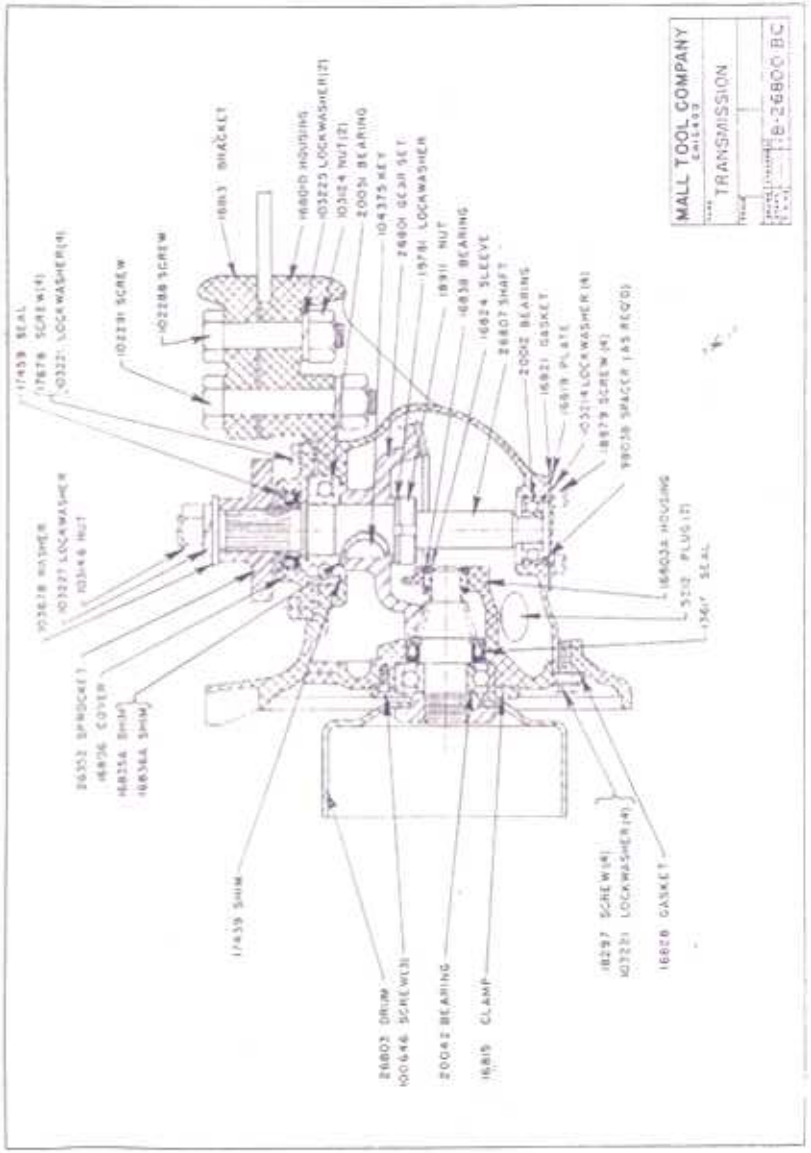

PARTS PRICE LIST

No. 26800-8C Transmission

Part No.	Description	Price Ea.	Part No.	Description	Price Ea.
5212	Plug	$ .10	18911	Nut	$ .35
9803B	Spacer	.15	19781	Lockwasher	.05
13618	Seal	.75	20012	Bearing	1.50
16801D	Housing	25.00	20042	Bearing	2.25
16803A	Housing	7.50	20051	Bearing	2.50
16806	Cover	1.10	26352	Sprocket	4.00
16813	Bracket	3.00	26801	Gear Set	30.00
16815	Clamp	1.90	26803	Drum	2.10
16819	Plate	.20	26807	Shaft	10.00
16821	Gasket	.05	100646	Screw	.03
16824	Sleeve	.50	102288	Screw	.10
16828	Gasket	.15	102291	Screw	.10
16835A	Shim	.10	103124	Nut	.05
16836A	Shim	.05	103146	Nut	.15
16838	Bearing	2.40	103214	Lockwasher	.03
17439	Shim	.05	103221	Lockwasher	.03
17459	Seal	.75	103225	Lockwasher	.05
17678	Screw	.02	103227	Lockwasher	.05
18297	Screw	.05	103678	Washer	.01
18879	Screw	.05	104375	Key	.03

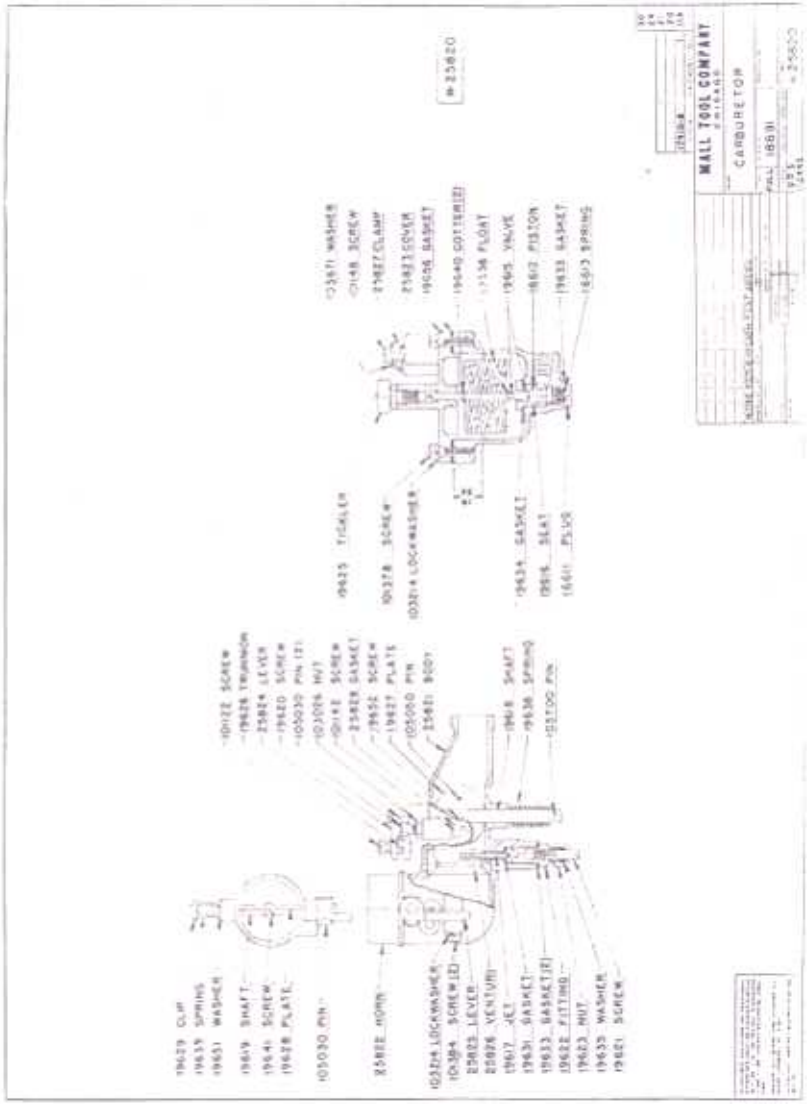

PARTS PRICE LIST

No. B-25820 Carburetor

Part No.	Description	Price Ea.
B-25820	Carburetor (complete)	$20.00
16611	Plug	.60
16612	Piston	.36
16613	Spring	.06
19615	Valve	.75
19616	Seat	.55
19617	Jet	.60
19618	Shaft	1.00
19619	Shaft	.75
19620	Screw	.90
19621	Screw	.80
19622	Fitting	.70
19623	Nut	.25
19624	Plug	.25
19625	Tickler	1.00
19626	Trunnion	.25
19627	Plate	.20
19628	Plate	.15
19629	Clip	.15
19631	Gasket	.05
19633	Gasket (3 required)	.05
19634	Gasket	.05
19635	Washer	.05
19636	Float	.40
19638	Spring	.15
19639	Spring	.10
19640	Cotter (2 required)	.05
19641	Screw	$ .05
19651	Washer	.05
19652	Screw	.05
19656	Gasket	.10
25821	Body	8.50
25822	Horn	3.00
25823	Cover	2.25
25824	Lever, Throttle	.70
25825	Lever, Choke	.60
25826	Venturi	.80
25827	Clamp	.15
25828	Gasket	.05
101122	Screw	.02
101142	Screw	.02
101148	Screw	.02
101378	Screw	.02
101384	Screw (2 required)	.02
103026	Nut	.05
103214	Lockwasher (2 required)	.03
103671	Washer	.03
103700	Pin	.01
105030	Pin (3 required)	.02
105050	Pin	.02

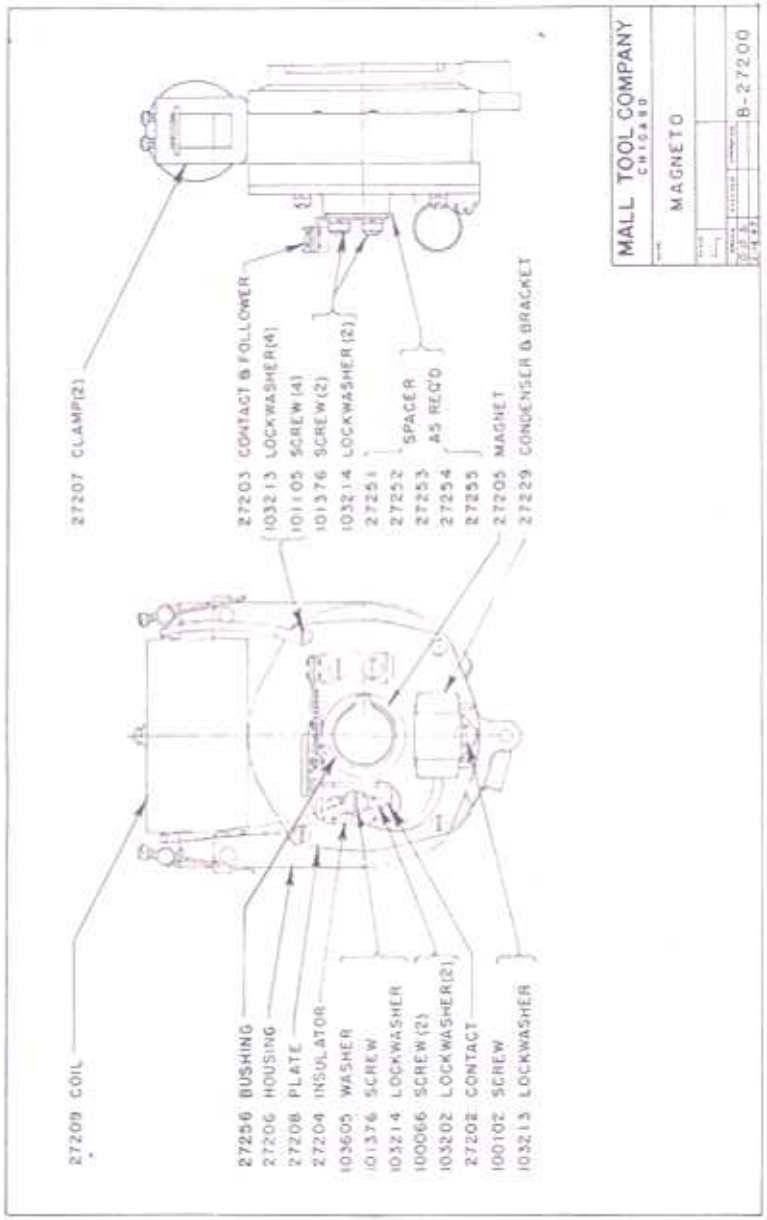

PARTS PRICE LIST

No. 27200 Magneto

Part No.	Description	Price Ea.	Part No.	Description	Price Ea.
27200	Magneto (complete)	$25.00	27252	Spacer	$ .02
27202	Contact	.26	27254	Spacer	.02
27203	Contact and Follower	.78	27255	Spacer	.02
27204	Insulator	.45	27256	Bushing	.30
27205	Magnet	9.40	100066	Screw (2 required)	.01
27206	Housing	6.00	100102	Screw	.01
27207	Clamp (2 required)	.25	101105	Screw (4 required)	.02
27208	Plate	1.50	101376	Screw (3 required)	.03
27209	Coil	4.60	103202	Lockwasher (2 required)	.03
27229	Condenser and Bracket	.80	103213	Lockwasher (5 required)	.03
27251	Spacer	.02	103214	Lockwasher (3 required)	.03
27253	Spacer	.02	103605	Washer	.03

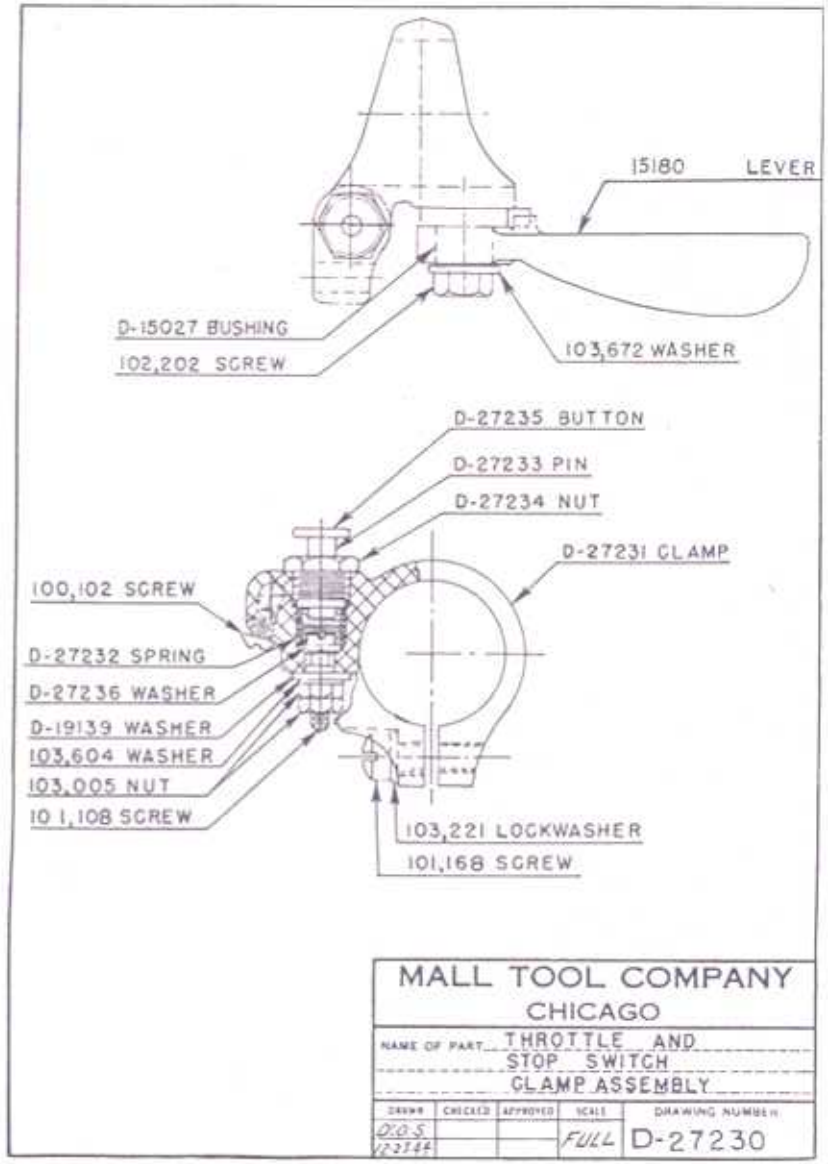

PARTS PRICE LIST

No. 27230 Throttle and Stop Switch Clamp Assembly

Part No.	Description	Price Ea.
27230	Throttle and Stop Switch Clamp Assembly (complete)	$ 3.35
15027	Bushing	.10
15180	Lever	.75
19129	Washer	.03
27231	Clamp	1.90
27232	Spring	.03
27233	Pin	.10
27234	Nut	.15
27235	Button	.10

Part No.	Description	Price Ea.
27236	Washer	$ .05
100102	Screw	.02
101108	Screw	.02
101168	Screw	.02
102202	Screw	.02
103005	Nut	.02
103221	Lockwasher	.03
103604	Washer	03
103672	Washer	.01

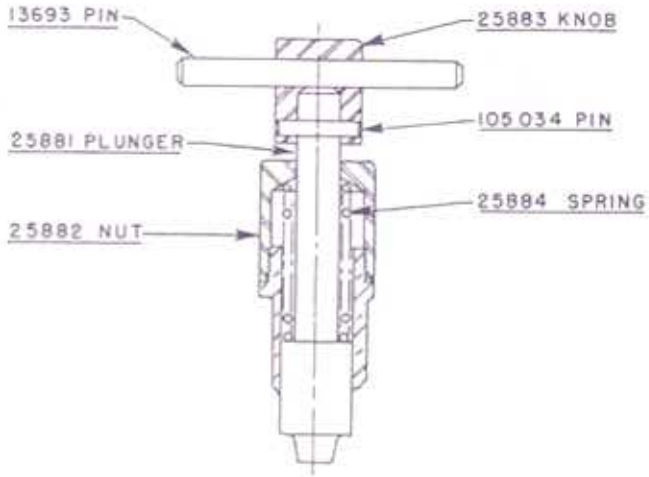

MALL TOOL COMPANY
CHICAGO

NAME OF PART TILTING PLUNGER ASSEMBLY

DRAWN	CHECKED	APPROVED	SCALE	DRAWING NUMBER
D.O.S. 1-2-49	W.L.G. 1-2-45		FULL	D-18010A

PARTS PRICE LIST

No. 18010-A Tilting Plunger Assembly

Part No.	Description	Price Ea.	Part No.	Description	Price Ea.
18010A	Tilting Plunger Assembly (complete)	$ 2.80	25882	Nut	$ .70
			25883	Knob	.45
13693	Pin	.03	25884	Spring	.10
25881	Plunger	1.50	105034	Pin	.02

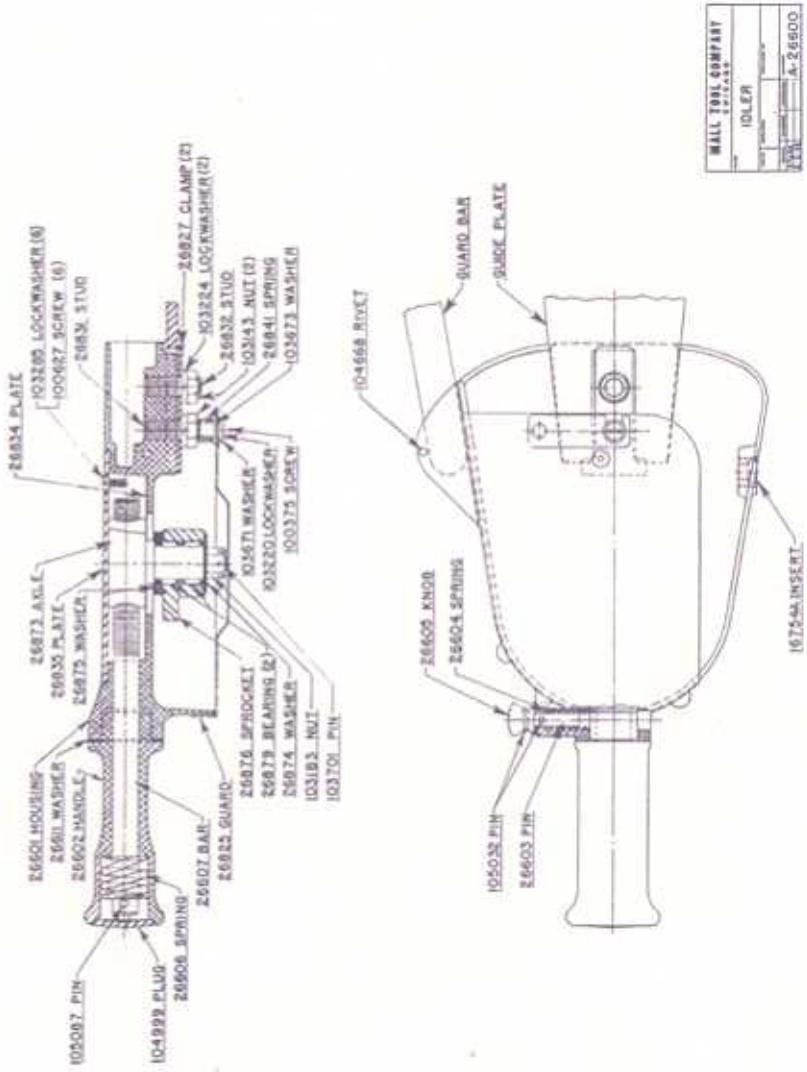

PARTS PRICE LIST

No. A-26600 Idler Assembly

Part No.	Description	Price Ea.
A26600	Idler Assembly (complete)	$25.00
16754A	Insert	.15
26601	Housing	13.75
26602	Handle	2.50
26603	Pin	.50
26604	Spring	.10
26605	Knob	.45
26606	Spring	.25
26607	Bar	1.90
26611	Washer	.05
26825	Guard	1.80
26827	Clamp (2 required)	.20
26831	Stud	.05
26832	Stud	.05
26834	Plate	.40
26835	Plate	.50
26841	Spring	.15
26873	Axle	4.85

Part No.	Description	Price Ea.
26874	Washer	$ .25
26875	Washer	.55
26876	Sprocket	5.30
26879	Bearing (2 required)	.75
100375	Screw	.02
100627	Screw (6 required)	.02
103143	Nut (2 required)	.05
103183	Nut	.05
103220	Lockwasher	.03
103224	Lockwasher (2 required)	.03
103285	Lockwasher (6 required)	.03
103671	Washer	.03
103673	Washer	.03
103701	Pin	.02
104668	Rivet	.01
104999	Plug	.02
105032	Pin	.02
105087	Pin	.02

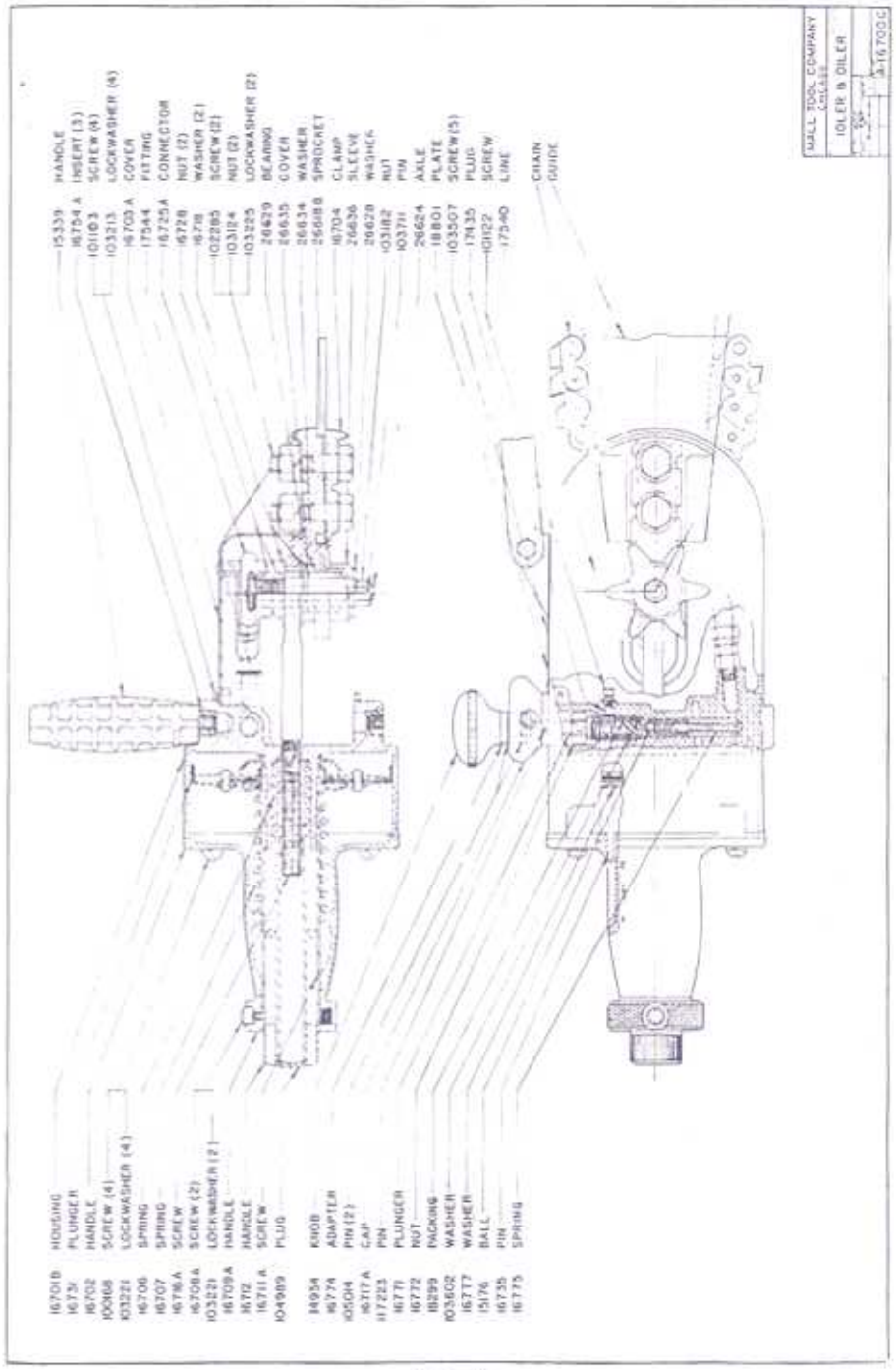

PARTS PRICE LIST

No. 16700-C Automatic Idler and Oiler Assembly — $75.00

Part No.	Description	Price Ea.	Part No.	Description	Price Ea.
14934	Knob	$ .40	18290	Packing	$ .05
15176	Ball	.01	18801	Plate	.25
15339	Handle	1.15	18875	Groove-Pin	.02
16701B	Housing	19.00	26618B	Sprocket	4.00
16702	Handle	5.10	26620	Sprocket Axle Assembly	8.40
16703A	Cover	.70			
16704	Clamp	.40	26624	Axle	2.05
16706	Spring	.20	26628	Washer	.20
16707	Spring	.55	26629	Bearing	1.00
16708A	Screw (2)	.10	26634	Washer (2)	.05
16709A	Handle	2.25	26635	Cover	.40
16711A	Screw	3.45	26636	Sleeve	.70
16712	Handle	2.10	100168	Screw (4)	.02
16716A	Screw	2.35	101103	Screw (4)	.02
16717A	Cap	.60	101122	Screw	.02
16718	Washer (2)	.45	102205	Screw	.02
16725A	Connector	1.55	102285	Screw (2)	.15
16728	Nut (2)	.20	103124	Nut (2)	.05
16731	Plunger	4.20	103182	Nut	.02
16735	Pin	.05	103213	Lockwasher (4)	.03
16754A	Insert (3)	.15	103221	Lockwasher (6)	.03
16771	Plunger	.60	103225	Lockwasher (2)	.03
16772	Nut	1.60	103507	Screw (5)	.03
16774	Adapter	.45	103568	Nut	.10
16775	Spring	.20	103602	Washer	.03
16777	Washer	.80	103672	Washer	.01
17435	Plug	.20	103711	Pin	.01
17540	Line	1.50	104989	Plug	.05
17544	Fitting	.20	105014	Pin (2)	.02

ACCESSORIES
PARTS PRICE LIST

for Model 6 Chain Saw

Part No.	Description	Price Ea.
2001A	Wrench, Open End Double ⅞ x 1"	$ .35
10348	Wrench, Open End Double ⅝ x ¾"	.35
11047	Box for Tools	2.75
14204	Hammer, Ball Pen 6 oz.	.60
14206	Screw Driver, Slotted	.40
14207	Handle for File	.10
14313	Gauge for Guide Plate Groove	.70
14928	Screw Driver, Phillips	1.45
15270	Puller Assembly	1.25
15329	Can for Gasoline, 2½ Gallon	4.25

Part No.	Description	Price Ea.
15807	Plug, Spark, 18MM	$ .55
15886	Cord, Starter Assembly	.20
17704	Plier, 62 Combination	.50
17705	Wrench for 18MM Spark Plug, 1" Hex.	.35
17735	Set, Nail	.20
18347	Grease, 1 lb. can	1.00
19718	Wrench, Box ½ x 7/16	.70
25750	Gauge for Spark Plug Gap	.15
26255	File, 8" Mill Bastard	.65
26664	Wedge	1.50